OPERATING INSTRUCTIONS AND PARTS MANUAL

FOR INSTALLATION / MAINTENANCE / ADJUSTMENT

IDEAL

IDEAL STITCHER DIVISION

W. R. PABICH
MANUFACTURING COMPANY INC.
2323 N. Knox Avenue/Chicago 60639
Phone: 773/486-4141

WIRE
STITCHERS

STANDARD & SPECIAL MACHINES AND STITCHING WIRE

IMPORTANT

THE IDEAL STITCHER FURNISHED YOU IS A:

Model_____

Serial No. _____

Wire Size _____

Crown Width _____

Cutter Blade Size _____

Motor:_____ HP._____ RPM_____ PHASE

Always give the Type, Serial Number, Model Number, Wire Size, and Crown Width of your IDEAL STITCHER when ordering parts, or requesting information.

WARRANTY INFORMATION

"Your new wire stitcher is warranted to be free from defects for a period of six calendar months from the date of manufacture. This warranty does not cover, nor does it intend to cover, abuse as defined by the manufacturer, or wear and tear parts. Should there be any questions concerning the type of warranty or the scope of the warranty, they should be directed in writing to the manufacturer, who will respond in writing. Your Ideal Wire Stitcher has been manufactured, like many other Ideal Stitchers, under the strictest quality control processes and shall provide many years of trouble free service with proper care and maintenance. You must read your manual carefully, and if you have any questions, please contact the manufacturer. Good Luck in using your IDEAL WIRE STITCHER in the many future years ahead. And as a final note, please order only genuine IDEAL REPLACEMENT PARTS and Ideal approved Stitching Wire."

STANDARD STAPLE SIZES

The crown of a staple is measured inside the legs.

The leg length is measured this way from top to bottom.

STANDARD SIZE CUTTER BLADES AND LEG LENGTH PRODUCED WHEN USED ON 7/16" CROWN MACHINES

	7/16" Crown
1/16" Blade makes	1/4" Leg
1/8" Blade makes	5/16" Leg
3/16" Blade makes	3/8" Leg
1/4" Blade makes	7/16" Leg
5/16" Blade makes	1/2" Leg
3/8" Blade makes	9/16" Leg

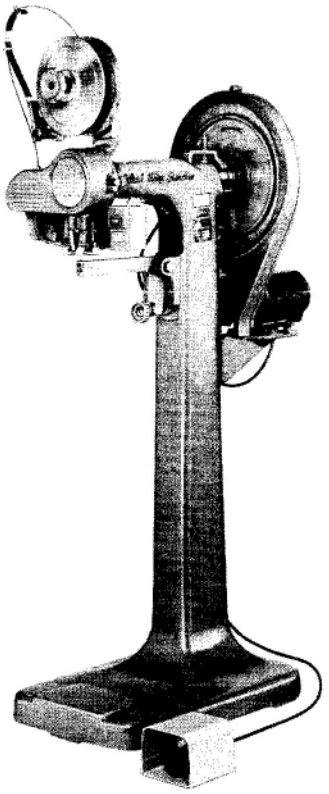

IDEAL STRAIGHT ARM STITCHER

The IDEAL Straight-Arm Stitcher can be used in a multitude of applications, not only in box-making but in packing, assembling, ticketing, and manufacturing—especially in fastening operations.

Carefully designed to give low-cost dependable service the IDEAL Straight-Arm Stitcher can be employed to effectively reduce costs in any of the following operations:

General box work
Closing mattress boxes
Attaching wood handles to baskets
Attaching small articles to display cards
Stitching solid fibre or corrugated beer and beverage cases
Assembling suit boxes
Attaching rope handles to shopping bags
Closing cellophane bags containing potato chips, cookies, candy, etc.
Attaching cloth to wood (flags, folding chairs, etc.)
Attaching tickets to gloves and other articles
Display card and box work
Stitching paper coal bags
Stitching seams of heavy-duty work gloves
Assembling rag board and upholstery in automobiles

SPECIFICATIONS

Model - IS 1244	12 inch Straight-Arm Stitcher
Capacity	Up to 300 pt. Board
Maximum Thickness	3/8"
Height from Floor to Stitching Point	44"
Wire Size 020 x 103 Or	Optional
Speed	260 stitches per minute
Variable Speed Optional At Slight Additional Cost.	
Base Measurements	30"x18"
Weight (crated)	435 lbs.
Weight of Machine only	365 lbs.

Also available in 20, 25, 30, 36, and 42 inch throat sizes and wide crown stitcher models.

IDEAL BOTTOM STITCHER

Carton bottoms are sealed more efficiently and more economically by steel-wire stitching than by any other method. Stronger and cleaner than glue or tape, steel-wire stitching also saves time, labor, money, and losses in shipping.

Climatic conditions inside or outside the plant cannot weaken or otherwise affect IDEAL sealed cartons. There is no waiting for adhesive to set—as soon as they are stitched, cartons may be packed. One operator can turn out from 200 to 800 cartons an hour, depending on the experience of the operator and the size of the carton. The saving in labor varies from 40% to 60% and the cost of the steel wire used is as little as 5¢ for 100 cartons.

ANYONE CAN OPERATE IT

IDEAL Stitchers are so easy to operate that any inexperienced girl needs only a few minutes of instruction before going to work. The carton is simply placed over the clincher post with bottom flaps folded over into position for stitching. The treadle is then depressed to move the box into stitching position. When the operator's foot comes in contact with the floor switch the machine is tripped and the operation completed.

Machine speed can always be adjusted to the speed and experience of the operator. No resetting is required for different sizes of cartons.

SPECIFICATIONS

Model - IB 1240	12 inch Bottom Stitcher
Capacity	Handles Cartons up to 24" square and 40" deep
Maximum Thickness	3/8"
Height from Floor to Stitching Point	44"
Wire Size 020 x 103 Or	Optional
Speed	260 stitches per minute
Variable Speed Optional At Slight Additional Cost.	
Base Measurement	30"x18"
Weight (crated)	470 lbs.
Weight of Machine only	400 lbs.

Also available in 20, 25, and 30 inch throat sizes as well as wide crown models.

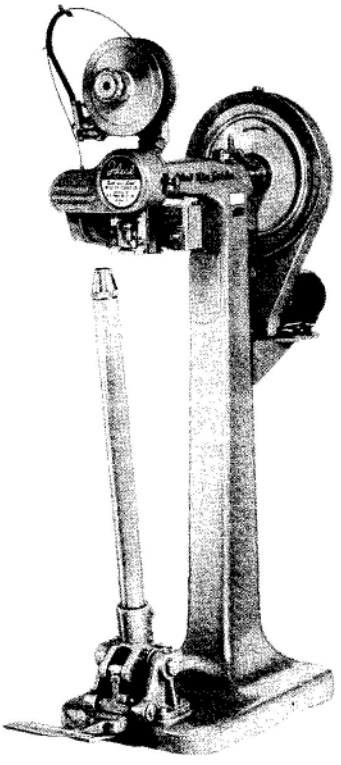

INSTALLATION INSTRUCTIONS

1 - EXAMINATION - Before uncrating, examine your stitcher for any visible damage in transit. If damaged, do not uncrate the machine. Notify the carrier or trucking company who delivered the machine and also your IDEAL STITCHER Representative.

2 - UNCRATING STITCHER - (A) Remove the end of the crate at which the motor is located. (B) Remove the two bolts which hold the base of the stitcher to the bottom of the crate. (C) Remove the cross brace in the upper half of the crate which holds the stitcher in position. (D) Pull the stitcher from the crate by grasping the heavy casted column and motor bracket. DO NOT PULL ON GEAR GUARD.

After the machine is removed from the crate DO NOT PULL OR PUSH ON THE POST OR ARM OF THE STITCHER, as this can put the clincher block out of adjustment.

3 - LOCATION FOR STITCHER - Place the stitcher on a level and solid footing to prevent excessive vibration. This is necessary when the machine is not bolted to the floor.

4 - CLEAN THE STITCHER - When the machine is shipped from our factory it is coated with a rust-resistant compound. Remove this coating with a grease solvent before operating.

5 - LUBRICATION - After cleaning, your stitcher should be lubricated at all oiling points as shown on drawing A-10,027, page 5. Use SAE 20 oil for all lubrication. The machine should be oiled at least once every eight operating hours. The motor, every 2000 hours. For further instructions read page 4.

6 - CHECK MOTOR - The type of motor for your machine was specified on your purchase order. These specifications are repeated on a tag which is attached to your motor. Check this motor tag before connecting the machine to electric current.

7 - MOUNTING THE WIRE SPOOL BRACKET - After removing the wire spool, bracket and spool holder from the crate, mount your wire spool bracket as shown on drawing A-10,028 on page seven. There are two hexagon head screws furnished with the bracket for mounting. To install wire spool in spool holder, unscrew plate and place spool of wire over bushing. Replace plate and screw down firmly. Place spool holder on spool holder bracket stud so that wire leads off bottom of spool. Now cut wire ties or nylon tape, holding the coil of wire. NOTE - DO NOT CUT THESE TIES until the coil of wire is on the spool. Hold end of wire until you thread the machine.

8 - THREADING THE STITCHER - Thread the wire off the bottom of the spool through the loops, wire check part A-336, wire feed tubes part No. AA-349B and cutter tube A-316 as shown on drawing A-10,028, page 7.

NOTE - The above is the proper method for threading the Ideal wire stitcher using a five or ten pound coil holder. On 25-pound coil holder the wire is threaded from the top of the roll, as shown in figure A illustrated below.

9 - TO SET MACHINE FOR STITCHING - To set your machine properly, follow these four important steps.

(A) Lower the clincher part A-437 as far as possible by turning the knurled adjusting nut to its lowest position.

(B) Step on foot pedal and turn the fly wheel by hand until the former housing is at the lowest point of its stroke.

(C) Place a piece of material to be stitched over the clincher part No. A-437 or if the work is solid fibre, turn the adjusting knurled nut until the material is held firmly between the clincher and the former. If the work material is corrugated board, turn the knurled adjusting nut until clincher and formers make a slight compression on the work material.

(D) Return stitcher to neutral by rotating fly wheel until it turns freely.

The above refers to all post type stitchers. For arm type stitchers, adjust hand wheel part No. AA-67 to the lowest possible position by turning to the left and then follow same procedure as on post stitcher.

OPERATING INSTRUCTIONS

WARNING

PREVENT ACCIDENTS BY FOLLOWING THESE RULES . . .

1. DO NOT PUT YOUR HANDS NEAR AREA TO BE STITCHED WHEN MACHINE IS OPERATING.
2. TURN THE MOTOR OFF WHEN THE STITCHER IS NOT IN USE.

Turn ON the power and place the work material over the clincher. Make sure that the box is in the correct position for stitching (figures show the correct placement of stitches). →

POST STITCHERS:

Press down on the foot pedal (or electric trip if the machine is so equipped) gradually until the post is locked in an upright position. Then press the pedal down the rest of the way to engage the clutch. The machine will continue to stitch until the pedal is raised slightly.

ARM, TOP AND SEAM STITCHERS:

The clutch is engaged by stepping on the foot pedal (or electric trip if the machine is so equipped). These models will also continue to stitch while the pedal is held down.

NOTE

According to the Consolidated Freight Classification Rulings, wire stitches used to close corrugated and solid fibre shipping boxes should be placed not more than 2-1/2" apart along the edges of the flaps. While the number of stitches required depends primarily on the size of the box, the weight of the contents should also be considered. A box with a heavy load will often need more than the minimum number of stitches.

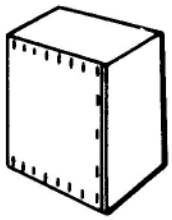

Bottom stitching of full flap slotted container (F.F.S.C.).

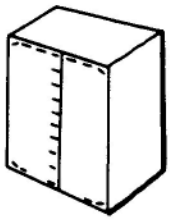

Top stitching of overlap slotted container (O.S.C.).

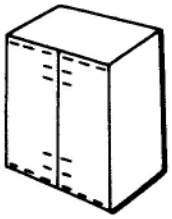

Bottom stitching of regular slotted container (R.S.C.).

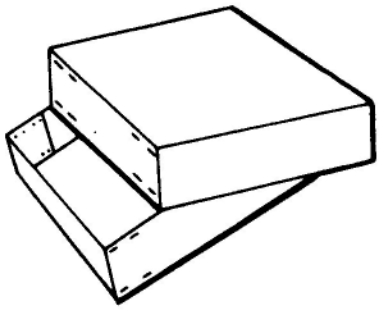

Side and end stitching of telescope container.

Instructions for the Care and Operation of **IDEAL** *Wire Stitchers*

CAUTION: DISCONNECT POWER SOURCE BEFORE SERVICING OR ADJUSTING

Lubrication — Oil thoroughly every eight working hours including several drops of oil in the FORMER and DRIVER mechanism.

Fill oil holes in top of slide box (see drawing A-10,027). See page 2.

Use good oil equivalent to No. 20 motor oil.

Do not lubricate brake shoe. It must be kept dry.

A hot motor does not indicate need of oiling. A new motor should run 1000 working hours before lubrication is required.

Important — Do not use graphite in working mechanisms. Light Cup Grease can be used in main cam groove as illustrated on page 2 of Lubrication Diagram.

Cleaning — A clean machine is essential if highest operating efficiency is to be maintained. This applies to any machine. Clean the wire check at least once a month. It picks up dirt and wire filings.

Threading — When threading see that the wire is held tightly in the wire spool. To thread the machine place wire spool in position so wire feeds from under side. Feed wire down through guides, etc. (see chart A-10,028 - see page 7), and down into head of machine. Before turning on power, form one staple by turning the machine over by hand. Be sure this staple does not stick in the anvil. Remove this staple. The machine is now ready for operation.

IMPORTANT

Do not allow operator to tamper with the machine unless he fully understands its mechanism. The simplicity of IDEAL design enables any operator after ordinary instruction to make the usual operating adjustments. However, when in doubt, or when parts must be removed and replaced, call the plant maintenance man, or our service and advice is as near as your telephone. Do not hesitate to call on us.

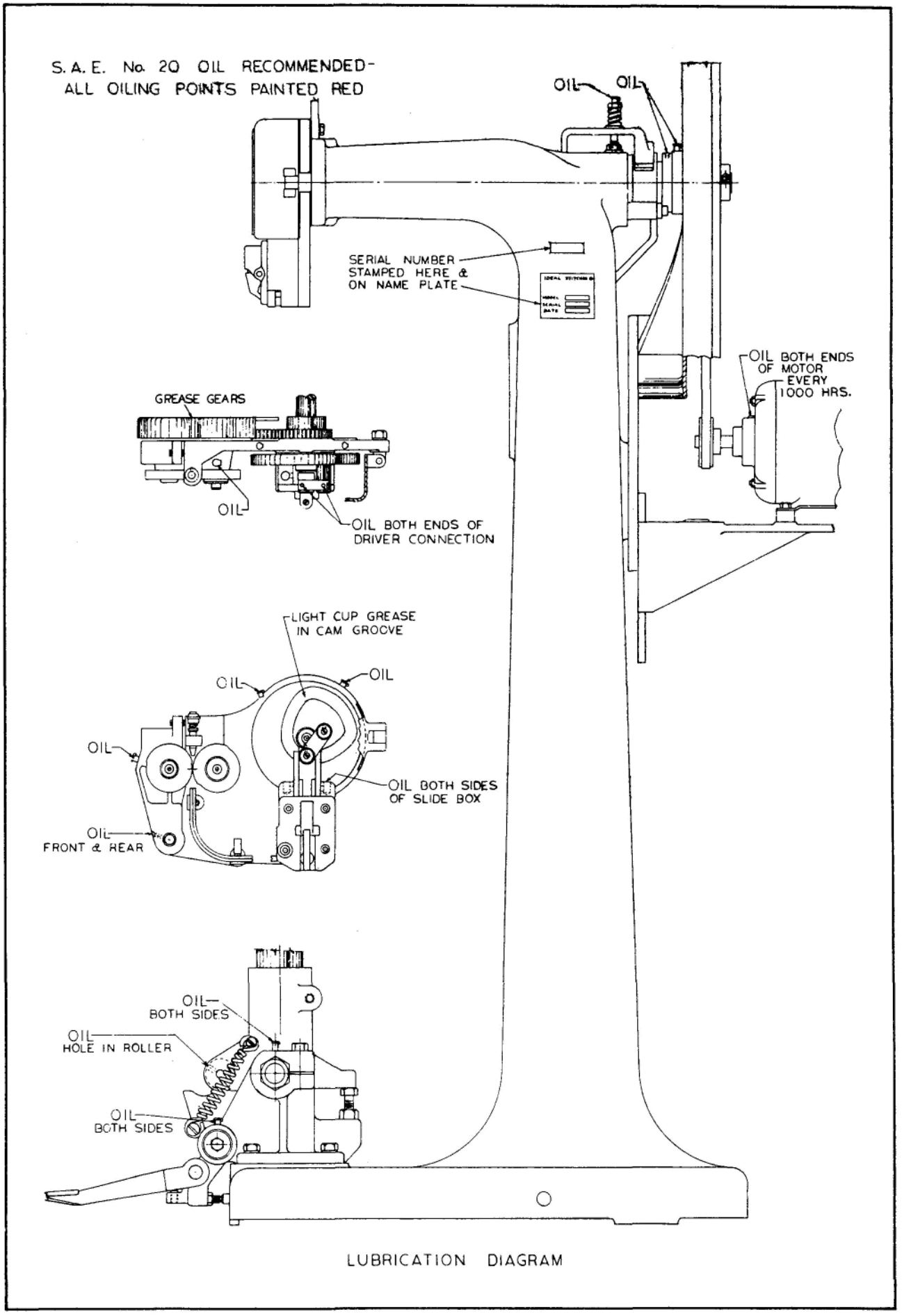

LUBRICATION DIAGRAM

REPLACEMENT OF REVERSIBLE PARTS AND MINOR ADJUSTMENTS

Adjusting Machine to Thickness of Work — Machine must be adjusted whenever there is a change in the thickness of work. To make such adjustments place the work in the machine and turn the machine over by hand until the FORMER and DRIVER reaches the lowest point of travel. Turn up the clincher post using knurled nut (if a Straight-Arm machine turn up clincher arm) until work is held firmly.

To Change Lenghts of Staple Legs — The thickness of the material to be stitched naturally determines the lenght of the staple legs required. The length of the left staple leg increases with the thickness of CUTTER BALDE A-304. The right staple leg lenght is adjusted by means of the Feed Wheels.
By feeding more wire the leg is increased and by feeding less wire the opposite is true. To adjust, loosen screw "A" (refer to chart A-10,028 - page 7) to loosen feed wheel on shaft, then turn the feed wheel to the right for more wire or to the left for less wire.
As more of the feeding cam of the left Feed Wheel is allowed to contact the feeding cam of the right Feed Wheel, the amount of wire fed through is increased. The reverse is also true. Consequently, in changing staple leg size, it is not only necessary to change the Cutter Blade but to adjust the wire feed.
PRECAUTION: Remove the Cutter Tube A-316 when changing to a Cutter Blade of another size.

To Set Clincher Block — Refer to Chart A-10,028 - page 7. When the block, Part A-437 becomes worn on one side, reverse it. It is designed for double life.

Cutter Blades - Part A-304 — Are also reversible. The cutting edge of the cutter blade must be very sharp. When both edges have become worn, order new blades.

Cutter Tubes - A-316 — When inserting a new cutter tube, be certain that the machine is in the idle position with the FORMER and DRIVER at the highest point of its travel. Insert the tube with the slotted side toward the back of the machine (this applies only where flat ribbon wire is used). Push the cutter tube into the head of the machine until it touches the CUTTER BLADE. Hold tightly in that position while tightening screw "C."

If the Machine Repeats — The Brake Shoe, or Band, is wearing or has loosened up. To eliminate this trouble merely tighten the Brake Shoe or Band. PART #A-427.

If the Clutch Pin Clicks — After the machine is operating, the Brake Shoe or Band is too tight or too loose. Loosen up a bit on Brake Adjusting Screw. PART #A-427.

Proper Braking — When the machine is braking properly, the oil hole in the clutch hub will stop at the top as shown on Drawing A-10,027 Lubrication Chart.

CAUTION: DISCONNECT POWER SOURCE BEFORE SERVICING OR ADJUSTING

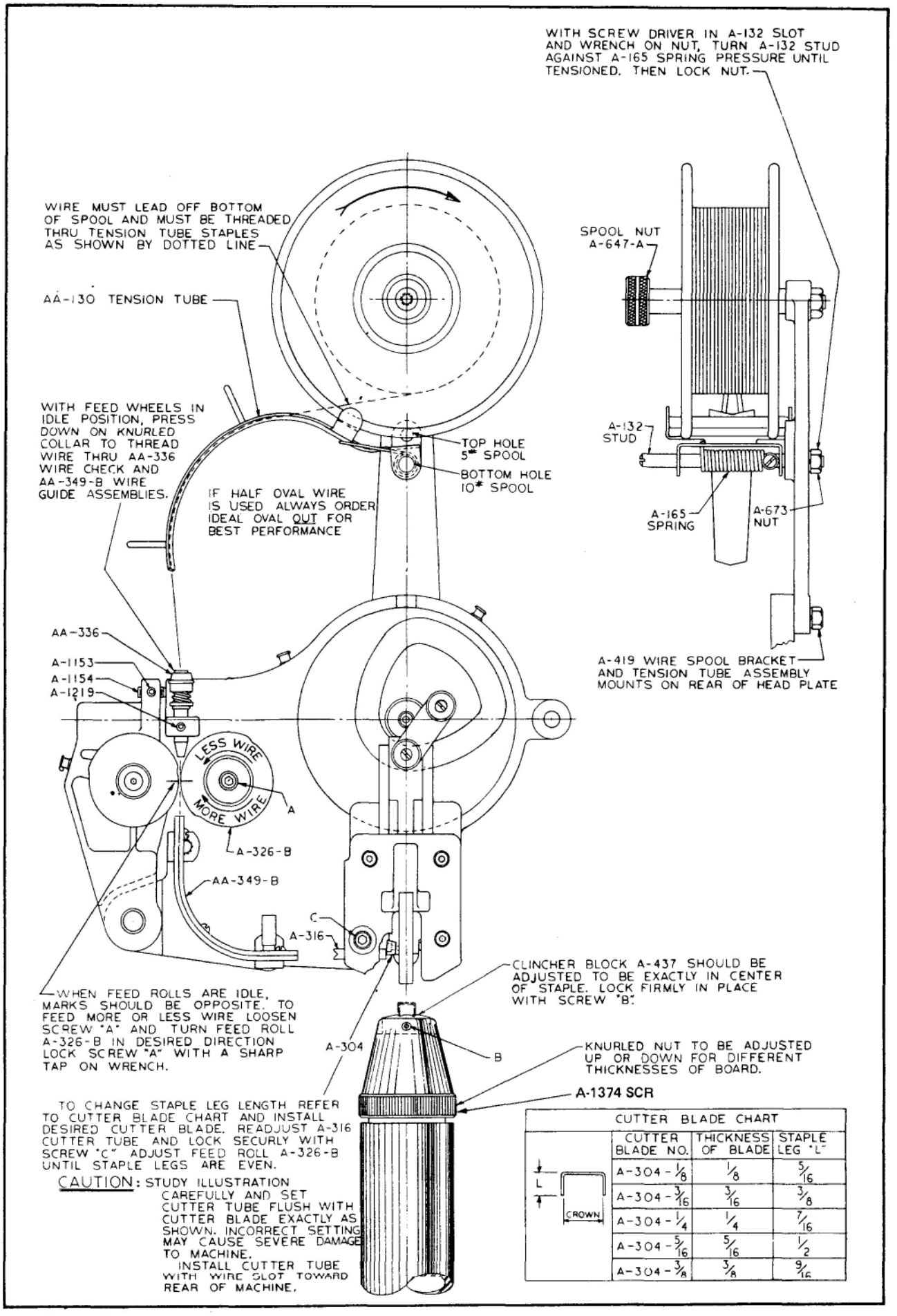

CUTTER BLADE CHART

CUTTER BLADE NO.	THICKNESS OF BLADE	STAPLE LEG "L"
A-304-1/8	1/8	5/16
A-304-3/16	3/16	3/8
A-304-1/4	1/4	7/16
A-304-5/16	5/16	1/2
A-304-3/8	3/8	9/16

DRAWING A-10,019

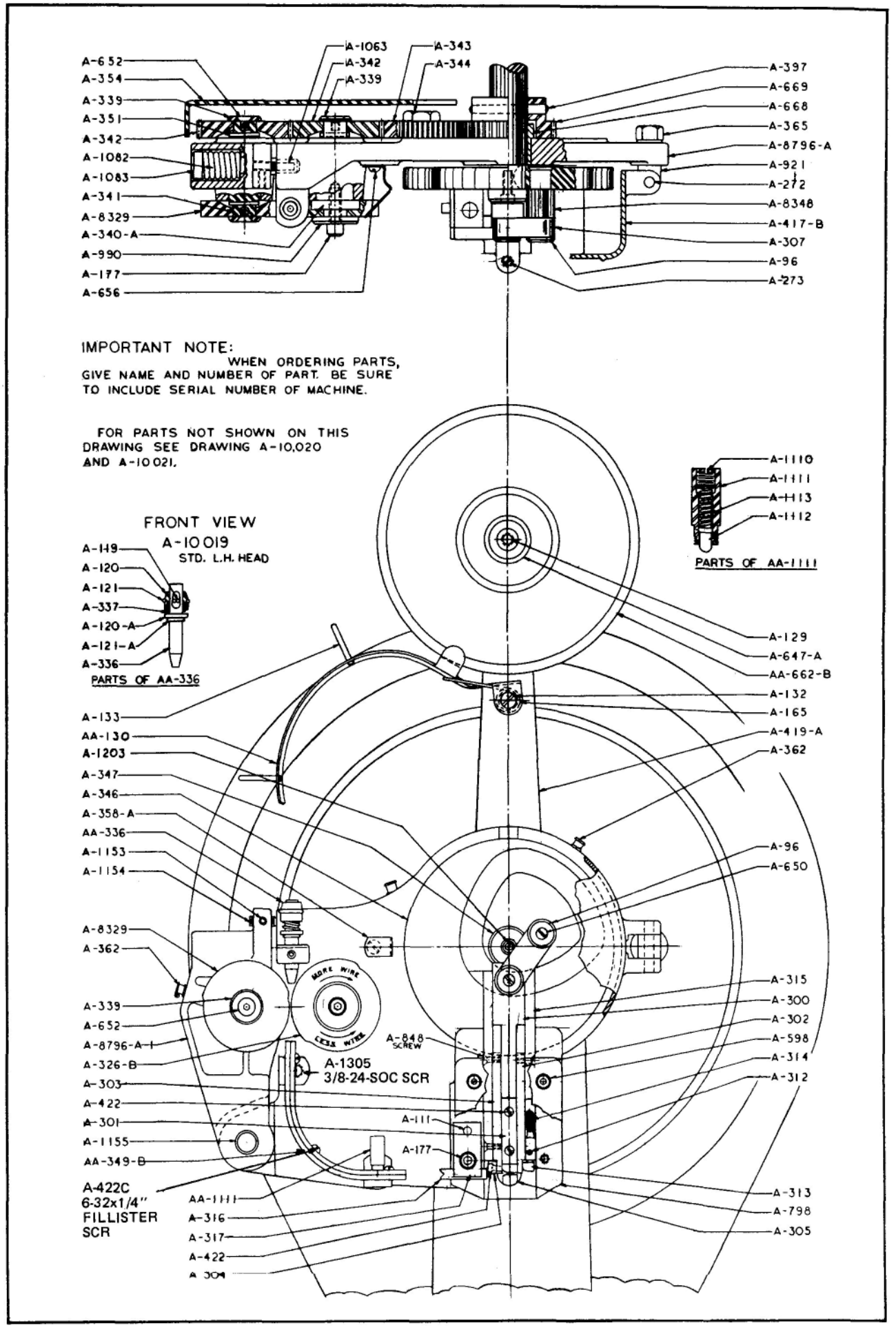

LIST OF PARTS SHOWN ON DRAWING A-10,019
STANDARD L. H. HEAD ASSEMBLY
FRONT VIEW

A-96	Driver Connection Washer
A-111	Dowel Pin
A-129	Wire Spool Stud
A-132	Tension Tube Stud
A-165	Tension Tube Spring
A-177	Cutter Tube Clamp Screw
A-272	Cam Guard Hinge Pin
A-273	Plunger Set Screw
A-300	Driver
A-301	Driver End
A-302	Former Leg - R. H.
A-303	Former Leg - L. H.
A-304	Cutter Blade
A-305	Anvil
A-307	Driver Connection
A-312	Former Plunger Screw
A-313	Former Plunger
A-314	Former Plunger Spring
A-315	Former Housing
A-316	Cutter Tube
A-317	Cutter Tube Clamp
A-326-B	Feed Roll - R. H.
A-339	Feed Roll Washer L. H.
A-340-A	Feed Roll Shaft - R. H.
A-341	Feed Roll Shaft - L. H.
A-342	Feed Roll Gear
A-343	Idler Gear
A-344	Idler Gear Screw
A-346	Former Cam
A-347	Cam Retaining Washer
A-351	Feed Roll Drive Pin
A-354	Gear Guard
A-358-A	Cam Cover Latch
A-362	Oil Hole Cover
A-365	Hex. Nut
A-397	Drive Gear Pin
A-417-B	Cam Cover
A-419-A	Wire Spool Bracket
A-422	Driver End or Cutter Blade Screw
A-422-C	6-32x1/4" Fillister HD SCR.
A-598	Face Plate Screw
A-647-A	Wire Spool Knob
A-650	Driver Connectjon Screw
A-652-	L.H. Feed Roll Screw
A-656	Cam Cover Latch Screw
A-668	Head Plate Bushing
A-669	Feed Drive Gear
A-798	Slide Box
A-848	Former Leg Screw
A-921	Cam Cover Stud
A-990	R. H. Feed Roll Washer
A-1063	Feed Roll Hinge Stop
A-1082	Feed Roll Hinge Spring
A-1083	Shoulder Bolt
A-1153	Set Screw
A-1154	Set Screw
A-1155	Feed Roll Hinge Pin
A-1203	Washer Screw
A-8329	L. H. Feed Roll
A-8796-A	Head Plate
A-8796-A-1	Feed Roll Hinge
	SUB-ASSEMBLIES
AA-130	Wire Tension Tube Assembly
A-130	Wire Tension Tube
A-133	Wire Tension Tube Staple
A-135	Brake Lining
A-650	Screw
AA-336	Wire Check Assembly
A-119	Wire Check Pin
A-120	Wire Check Sleeve
A-120-A	Wire Check Washer
A-121	Pin Retainer
A-121-A	Spring Retainer
A-336	Wire Check Body
A-337	Spring
AA-349-B	Wire Guide Assembly
A-349-B	Wire Guide Bottom Plate
A-350-A	Wire Guide Top Plate
AA-1111	Wire Guide Plunger Assembly
A-1110	Set Screw
A-1111	Plunger Sleeve
A-1112	Plunger
A-1113	Spring
AA-662-B	Wire Spool Assembly
A-1305	Wire Guide SCR. 3/8-24x1" SOC.CAP. SCR.

EXPLODED VIEW OF SLIDE BOX & ASSEMBLY

EXPLODED VIEW OF SLIDE BOX — FORMER & DRIVER ASSEMBLY

WHEREVER SIZE WILL ALLOW PARTS ARE STAMPED WITH NUMBERS TO SIMPLIFY ORDERING

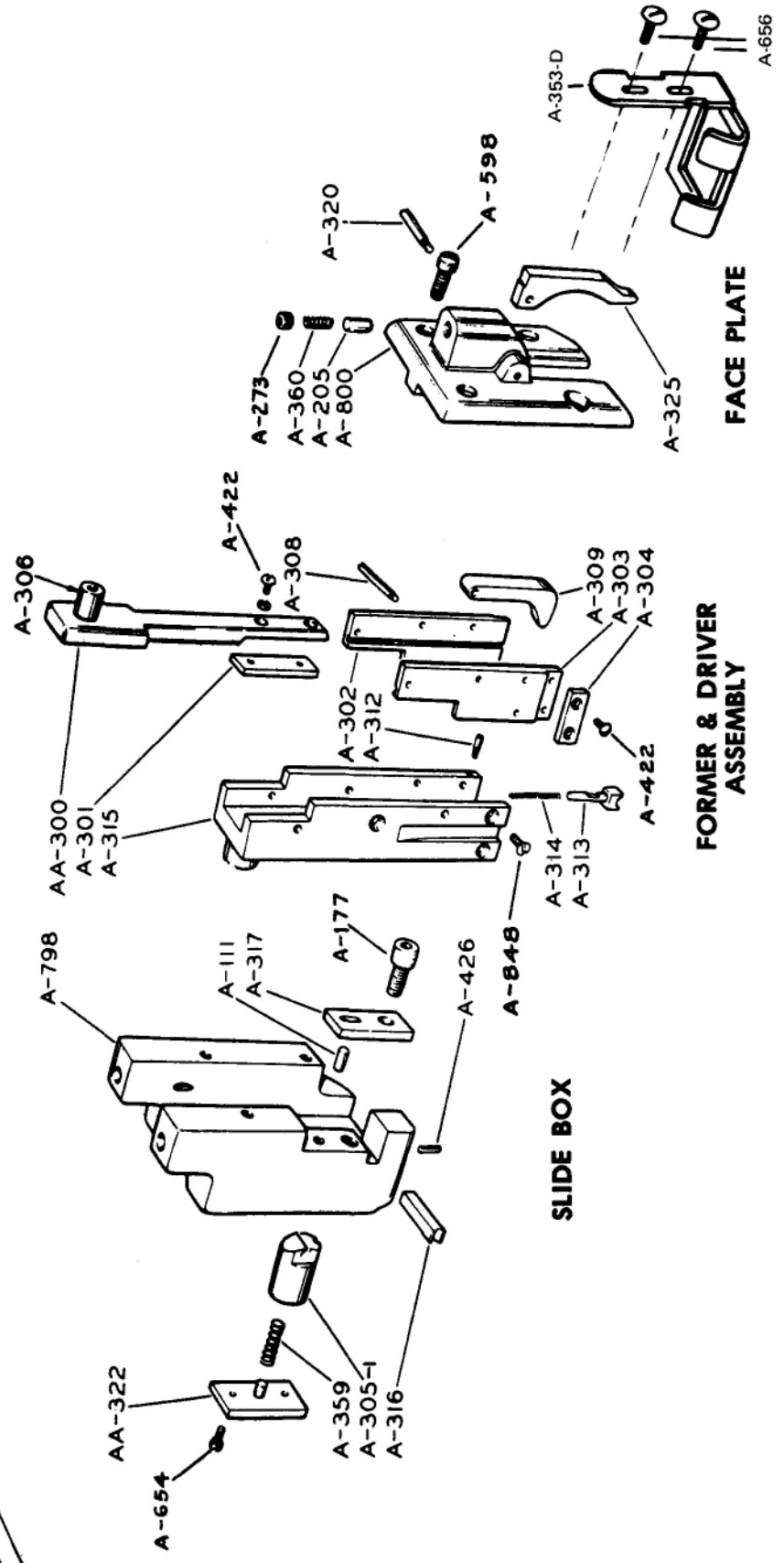

— ASSEMBLED UNITS —

AA-4	Face Plate Complete — consists of A-800, A-205, A-320, A-325, A-360.
AA-315	Former & Driver Complete — consists of A-300, A-301, A-302, A-303, A-304, A-306, A-308, A-309, A-310, A-311, A-312, A-313, A-314, A-315.
AA-798	SLIDE BOX COMPLETE CONSISTS OF A-798, A-111, A-317, A-177, A-426, A-316, A-305, A-359, A-654 (2) and AA-322 A-353-D-Finger Guard, L.H. with 2 - A-656 - RD. HD. SCR.

LIST OF PARTS ON EXPLODED VIEW OF SLIDE BOX FORMER & DRIVER ASSEMBLY

A-111 Dowel Pin
A-177 Cutter Clamp Screw
A-205 Supporter Plunger Spring Pin
A-273 Supporter Plunger Spring Screw
A-300 Driver
A-301 Driver End
A-302 Former Leg R. H.
A-303 Former Leg L. H.
A-304 Cutter Blade
A-305 Anvil
A-306 Driver Pin
A-308 Supporter Stud
A-309 Supporter
A-310 Former Roller
A-311 Former Pin
A-312 Former Plunger Screw
A-313 Former Plunger
A-314 Former Plunger Spring
A-315 Former Housing
A-316 Cutter Tube
A-317 Cutter Tube Clamp
A-320 Supporter Plunger Pivot Pin
AA-322 Anvil Spring Plate
A-325 Supporter Plunger
A-353D Finger Guard
A-359 Anvil Spring
A-360 Supporter Plunger Spring
A-422 Cutter Blade and Driver End Screws
A-426 Anvil Stop
A-598 Face Plate Screw
A-654 Anvil Spring Plate Screw
A-656 Finger Guard Screws
A-798 Slide Box
A-848 Former Leg Screws

ASSEMBLY WIRE GUIDE And COMPLETE WIRE CHECK ASSEMBLY AA-336

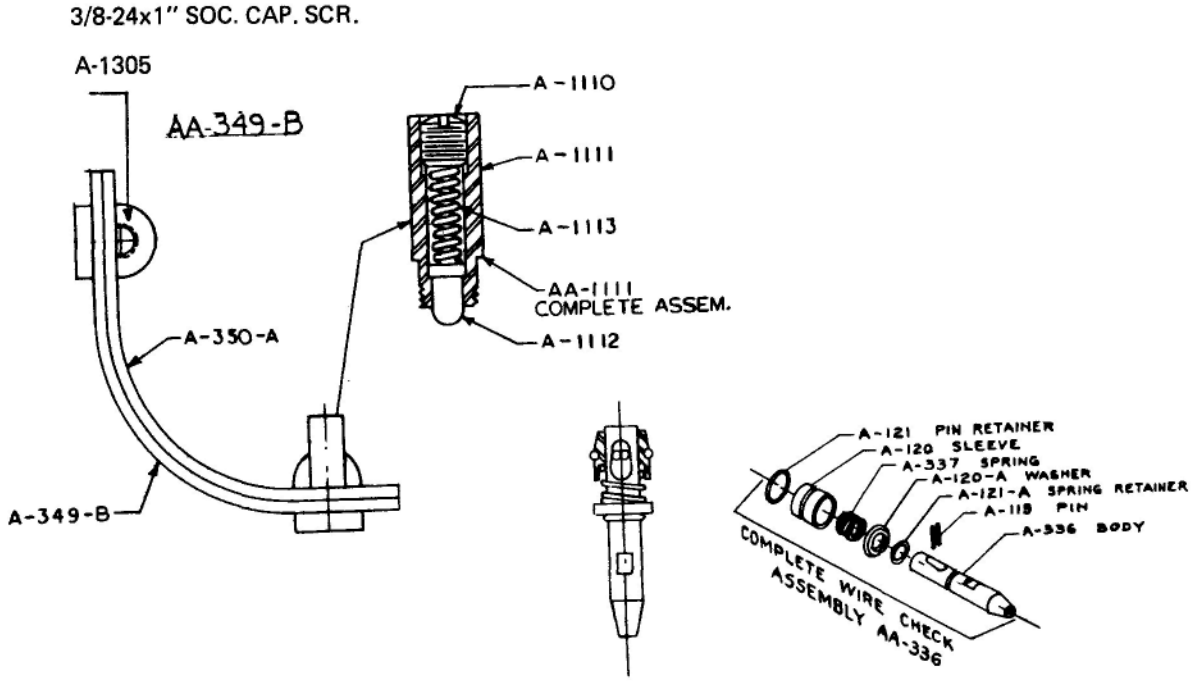

IDEAL STANDARD ARM STITCHER — SOLENOID TRIP
DRAWING A-10,021

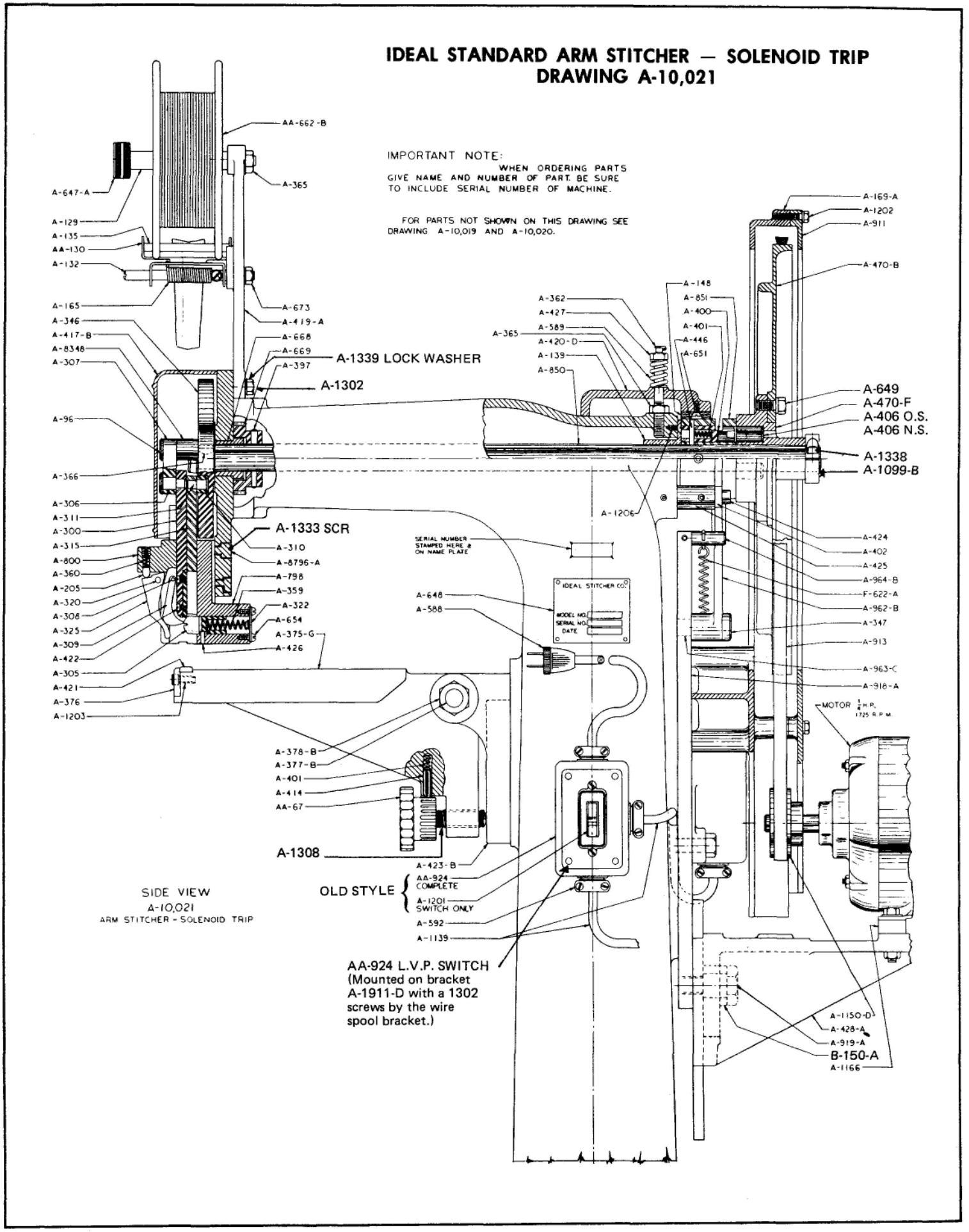

LIST OF PARTS SHOWN ON DRAWING A-10,021
STANDARD ARM STITCHER — SOLENOID TRIP

A-96	Driver Connection Washer
A-129	Wire Spool Stud
A-132	Tension Tube Stud
A-139	Rear Drive Shaft Bushing
A-148	Brake Shoe Lining
A-165	Tension Tube Spring
A-169-A	Drive Pulley Guard
A-205	Supporter Plunger Pin
A-273	Plunger Set Screw
A-300	Driver
A-305	Anvil
A-306	Driver Pin
A-307	Driver Connection
A-308	Supporter Stud
A-309	Supporter
A-310	Former Roller
A-311	Former Pin
A-315	Former Housing
A-320	Plunger Pivot Pin
A-322	Anvil Spring Plate
A-325	Supporter Plunger
A-346	Former Cam
A-347	Cam Retaining Washer
A-359	Anvil Spring
A-360	Supporter Plunger Spring
A-362	Oil Hole Cover
A-365	Hex. Nut
A-366	Cam Key
A-375-G	Clincher Arm
A-376	Clincher Block Clamp
A-377-B	Clincher Arm Fulcrum Bolt
A-378-B	Hex. Nut
A-397	Drive Gear Pin
A-400	Clutch Pin
A-401	Clutch Spring
A-402	Clutch Latch
A-406	Drive Pulley Clutch Pin (Old Style)
A-406-B	Drive Pulley Clutch Pin (New Style)
A-414	Knob Lock Pin
A-417-B	Cam Cover
A-419-A	Wire Spool Bracket
AA-420-D	Brake Shoe with Lining A 148
A-421	Clincher Block
A-422	Driver End & Cutter Blade Screw
A-423-B	Clincher Arm Bracket
A-424	Clutch Latch Pin
A-425	Clutch Latch Spacer
A-426	Anvil Stop Pin
A-427	Brake Adjusting Screw
A-428-A	Motor Bracket
A-446	Clutch Hub Screw
A-470-B	Drive Pulley
A-470-F	Drive Pulley Hub
A-588	Motor Cord & Plug
A-589	Brake Shoe Spring
A-592	Wire Connecting Fitting
A-647-A	Wire Spool Knob
A-648	Name Plate
A-649	Cap Screw
A-651	Machine Screw
A-654	Machine Screw
A-668	Head Plate Bushing
A-669	Drive Gear
A-673	Hex. Nut
A-798	Slide Box
A-850	Drive Shaft - 12" Throat Machine
A-851	Clutch Hub
A-911	Drive Pulley Cover
A-913	V-Belt
A-918-A	Motor Base Support
A-919-A	Motor Base Shoulder Bolt
A-962-B	Clutch Toggle Lever
A-963-C	Eccentric Stud
A-964-B	Stop Pin
A-1099-B	Split Collar
A-1139	Electric Connecting Cord 30" Long
A-1150-D	Motor Pulley
A-1166	Motor Mount
A-1170	Drive Shaft - 20" Throat Machine
A-1202	Cap Screw
A-1203	Cap Screw
A-1208	Clutch Latch Scr. Stud.
A-1206	Rear Bushing Screw
A-1333	SOC HD CAP SCR. 5/16-18x7/8" SLIDE BOX (3 REQ)
A-1338	Collar Cap Screw
A-1302	Hex HD. SCR. 5/16-18x1" Hex.
A-1304	1/4" Lock Washer
A-1338	Collar Cap Screw
A-8348	Cam Stud
A-8796-A	Head Plate
B-150	Motor Bracket Washer
F-622-A	Toggle Lever Spring
A-1339	5/16 Lock Washer

SUB-ASSEMBLIES

A-1308	5/8-11 - Jam Nut
AA-67	Clincher Arm Adjusting Knob
A-412	Knob
A-413	Stud
AA-130	Wire Tension Tube Assembly
A-130	Wire Tension Tube
A-133	Wire Tension Tube Staple
A-135	Brake Lining
A-650	Screw
AA-662-B	Wire Spool Assembly
AA-924-A	L.V.P. Switch (Mounted on Brkt. A-1911-D with A-1302 Screws by the Wire Spool Brkt.)
AA-924	Starting Switch Assembly } Old Style
A-1201	Starting Switch only } Old Style

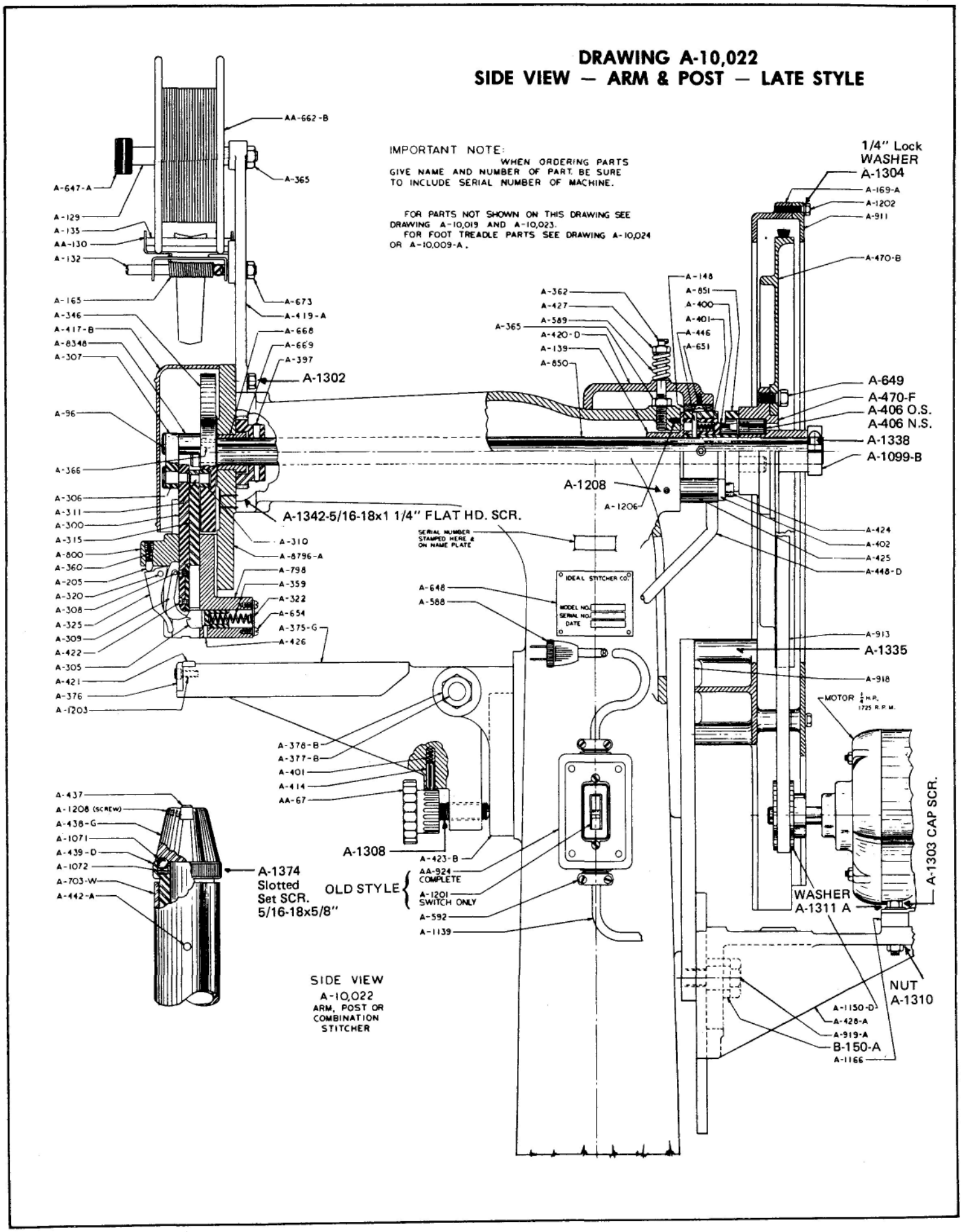
DRAWING A-10,022
SIDE VIEW — ARM & POST — LATE STYLE
IMPORTANT NOTE:
WHEN ORDERING PARTS GIVE NAME AND NUMBER OF PART. BE SURE TO INCLUDE SERIAL NUMBER OF MACHINE.
FOR PARTS NOT SHOWN ON THIS DRAWING SEE DRAWING A-10,019 AND A-10,023.
FOR FOOT TREADLE PARTS SEE DRAWING A-10,024 OR A-10,009-A.
AA-662-B
A-365
A-647-A
A-129
A-135
AA-130
A-132
A-165
A-346
A-417-B
A-8348
A-307
A-96
A-366
A-306
A-311
A-300
A-315
A-800
A-360
A-205
A-320
A-308
A-325
A-309
A-422
A-305
A-421
A-376
A-1203
A-673
A-419-A
A-668
A-669
A-397
A-1302
A-1342-5/16-18x1 1/4" FLAT HD. SCR.
A-310
A-8796-A
A-798
A-359
A-322
A-654
A-375-G
A-426
A-437
A-1208 (SCREW)
A-438-G
A-1071
A-439-D
A-1072
A-703-W
A-442-A
A-1374
Slotted
Set SCR.
5/16-18x5/8"
A-378-B
A-377-B
A-401
A-414
AA-67
A-1308
A-423-B
OLD STYLE
AA-924 COMPLETE
A-1201 SWITCH ONLY
A-592
A-1139
SIDE VIEW
A-10,022
ARM, POST OR COMBINATION STITCHER
A-362
A-427
A-589
A-365
A-420-D
A-139
A-850
A-148
A-851
A-400
A-401
A-446
A-651
A-1208
A-1206
SERIAL NUMBER STAMPED HERE & ON NAME PLATE
IDEAL STITCHER CO.
MODEL NO.
SERIAL NO.
DATE
A-648
A-588
1/4" Lock WASHER
A-1304
A-169-A
A-1202
A-911
A-470-B
A-649
A-470-F
A-406 O.S.
A-406 N.S.
A-1338
A-1099-B
A-424
A-402
A-425
A-448-D
A-913
A-1335
A-918
MOTOR 1/4 H.P. 1725 R.P.M.
A-1303 CAP SCR.
WASHER
A-1311 A
NUT
A-1310
A-1150-D
A-428-A
A-919-A
B-150-A
A-1166

LIST OF PARTS SHOWN ON DRAWING A-10,022
ARM, POST OR COMBINATION STITCHER
MECHANICAL TRIP

A-96	Driver Connection Washer
A-129	Wire Spool Stud
A-132	Tension Tube Stud
A-135	Tension Tube Leather
A-139	Rear Drive Shaft Bushing
A-148	Brake Shoe Lining
B-150A	5/8" Washer, N.S.
A-165	Tension Tube Spring
A-169-A	Drive Pulley Guard
A-205	Supporter Plunger Pin
A-273	Plunger Set Screw
A-300	Driver
A-305	Anvil
A-306	Driver Pin
A-307	Driver Connection
A-308	Supporter Stud
A-309	Supporter
A-310	Former Roller
A-311	Former Pin
A-315	Former Housing
A-320	Plunger Pivot Pin
A-322	Anvil Spring Plate
A-325	Supporter Plunger
A-346	Former Cam
A-359	Anvil Spring
A-360	Supporter Plunger Spring
A-362	Oil Hole Cover
A-365	Hex Nut
A-366	Cam Key
A-375-G	Clincher Arm
A-376	Clincher Block Clamp
A-377-B	Clincher Arm Fulcrum Bolt
A-378-B	Hex. Nut
A-397	Drive Gear Pin
A-400	Clutch Pin
A-401	Clutch Spring
A-402	Clutch Latch
A-406	Drive Pulley Clutch Pin (Old Style)
A-406-B	Drive Pulley Clutch Pin (New Style)
A-414	Knob Lock Pin
A-417-B	Cam Cover
A-419-A	Wire Spool Bracket
AA-420-D	Brake Shoe with Lining A 148
A-421	Clincher Block
A-422	Driver End & Cutter Blade Screw
A-423-B	Clincher Arm Bracket
A-424	Clutch Latch Pin
A-425	Clutch Latch Spacer
A-426	Anvil Stop Pin
A-427	Brake Adjusting Screw
A-428-A	Motor Bracket
A-437	Clincher Block
A-438-G	Clincher Head
A-439-D	Clincher Block Adjusting Nut
A-442-A	Clincher Post Adjusting Screw Pin
A-446	Clutch Hub Screw
A-448-D	Clutch Trip Rod
A-470-B	Drive Pulley
A-470-F	Drive Pulley Hub
A-588	Motor Cord & Plug
A-589	Brake Shoe Spring
A-592	Wire Connecting Fitting
A-647-A	Wire Spool Knob
A-648	Name Plate
A-649	Cap Screw
A-651	Machine Screw
A-654	Machine Screw
A-668	Head Plate Bushing
A-669	Drive Gear
A-673	Hex. Nut
A-703-W	Clincher Post
A-798	Slide Box
A-800	Face Plate
A-838	Clincher Post Holder for Combination Models only (Not Shown On Drawing)
A-850	Drive Shaft - 12" Throat Machine
A-851	Clutch Hub
A-911	Drive Pulley Cover
A-913	V-Belt
A-918	Motor Base Support
A-919-A	Motor Base Shoulder Bolt
A-1071	Ball
A-1099-B	Split Collar
A-1072	Spring
A-1139	Electric Connecting Cord - 30" Long
A-1150-D	Motor Pulley Constant Speed
A-1166	Motor Mount
A-1170	Drive Shaft - 20" Throat Machine
A-1201	Switch
A-1202	Cap Screw
A-1203	Cap Screw
A-1311A	5/16 Flat Washer
A-1206	Rear Bushing Screw
A-1323	1/4" Lock Washer
A-1208	Clincher Post Screw
A-1335	SCR Guard 5/16-18x2 1/2" SOC. CAP. SCR.
A-1302	SCR 5/16-18x1 Hex
A-1304	1/4" Lock Washer
A-8348	Can Stud
A-1303	Motor Cap Scr, 5/16-18x1 1/2" Hex
A-8796-A	Head Plate
B-150A	Motor Bracket Washer
A-1374	SCR. Lock Clincher Head in Nut 5/16-18x5/8 Slotted SCR

SUB-ASSEMBLIES

AA-67	Clincher Arm Adjusting Knob	
A-412	Knob	
A-1342	SCR.5/16-18x1 1/4" Flat HD. SOC.	
A-413	Stud	
AA-130	Wire Tension Tube Assembly	
A-130	Wire Tension Tube	
A-133	Wire Tension Staple	
A-135	Brake Lining	
A-650	Screw	
AA-662-B	Wire Spool Assembly	
AA-924-A	L.V.P. Switch	
AA-924	Starting Switch Assembly	Old Style
A-1201	Starting Switch Only	Old Style
A-1308	5/8-11 Jam Nut	

DRAWING A-10,024

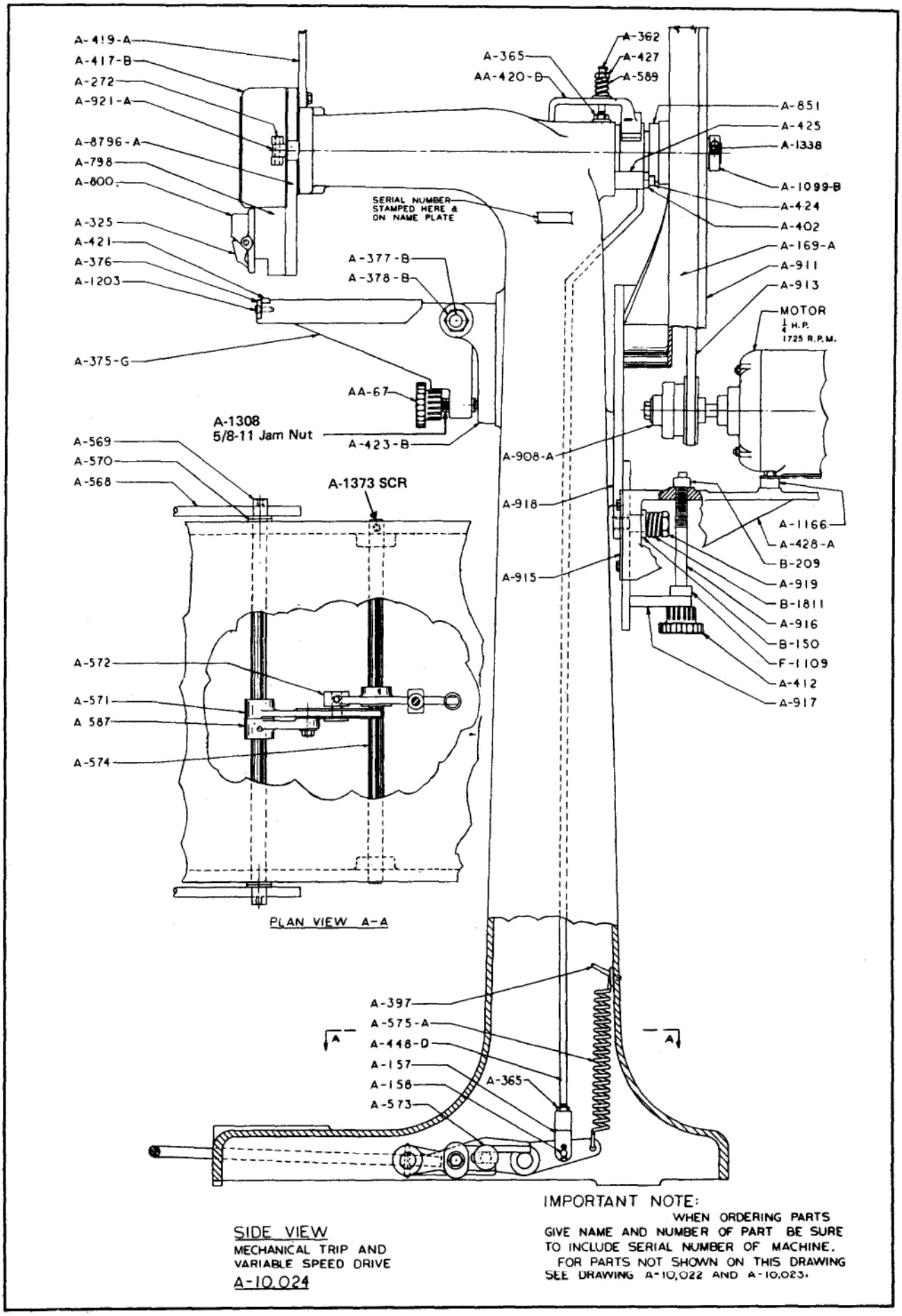

LIST OF PARTS SHOWN ON DRAWING A-10,024 MECHANICAL TRIP AND VARIABLE SPEED DRIVE

A-157	Clevis
A-158	Pin
A-169-A	Drive Pulley Guard
A-272	Cam Guard Hinge Pin
A-325	Supporter Plunger
A-362	Oil Hole Cover
A-365	Hex. Nut
A-375-G	Clincher Arm
A-376	Clincher Block Clamp
A-377-B	Clincher Arm Fulcrum Bolt
A-378-B	Hex. Nut
A-397	Drive Gear Pin
A-402	Clutch Latch
A-412	Adjusting Knob
A-417-B	Cam Cover
A-419-A	Wire Spool Bracket
AA-420-D	Brake Shoe with Lining A-148
A-421	Clincher Block
A-423-B	Clincher Arm Bracket
A-424	Clutch Latch Pin
A-425	Clutch Latch Spacer
A-427	Brake Adjusting Screw
A-428-A	Motor Bracket
A-448-D	Clutch Trip Rod
A-568	Treadle
A-569	Treadle Shaft
A-570	Collar
A-571	Treadle Shaft Arm
A-572	Clutch Trip Rod Arm
A-573	Stud
A-574	Clutch Trip Shaft
A-575-A	Clutch Trip Spring
A-587	Treadle Adjusting Arm
A-589	Brake Shoe Spring
A-649	Cap Screw
A-798	Slide Box
A-800	Face Plate
A-851	Clutch Hub
A-908-A	Motor Pulley For Variable Speed
A-911	Drive Pulley Cover
A-913	V-Belt
A-915	Motor Base Gib
A-916	Adjusting Screw
A-917	Adjusting Screw Bracket
A-918	Motor Base Support
A-919	Motor Base Shoulder Bolt
A-921-A	Cam Guard Stud
A-1099-B	Split Collar
A-1166	Motor Mount
A-1203	Cap Screw
A-1338	Collar Cap Screw
A-8796-A	Head Plate
B-150	Motor Bracket Washer
B-209	Set Collar
B-1811	Spring
F-1109	Set Collar
AA-67	Clincher Arm Adjusting Knob
A-412	Knob
A-413	Stud
A-1373	SCR. 5/16-18x1/2" SOC. Set Patch Lock SCR.
A-1308	5/8-11 Jam Nut

DRAWING A-10,023

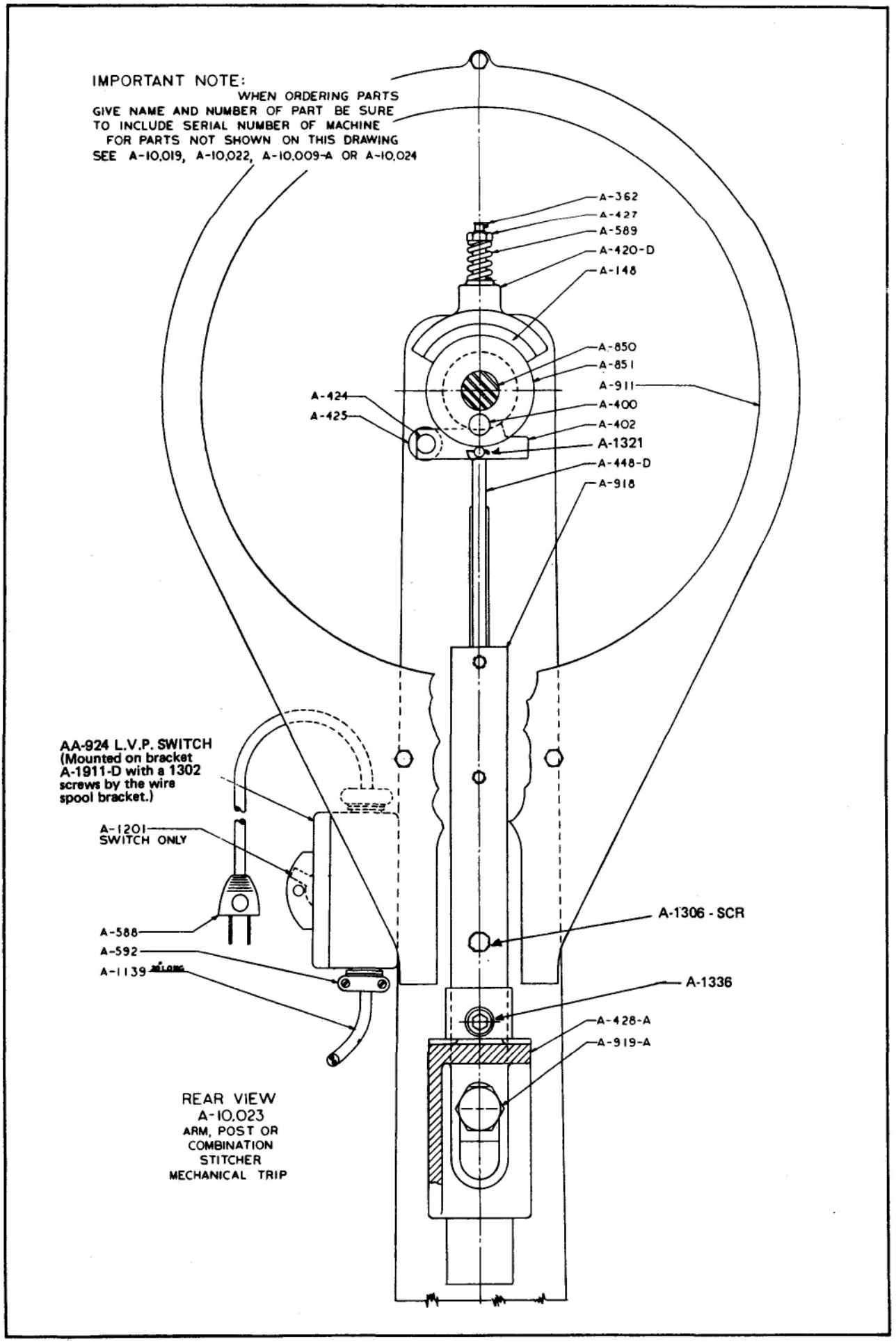

LIST OF PARTS SHOWN ON DRAWING A-10,023
ARM, POST OR COMBINATION STITCHER
MECHANICAL TRIP

A-148	Brake Shoe Lining	
A-362	Oil Hole Cover	
A-400	Clutch Pin	
A-402	Clutch Latch	
AA-420-D	Brake Shoe with Lining A-148	
A-424	Clutch Latch Pin	
A-425	Clutch Latch Spacer	
A-427	Brake Adjusting Screw	
A-428-A	Motor Bracket	
A-448-D	Clutch Trip Rod	
A-588	Motor Cord & Plug	
A-589	Brake Shoe Spring	
A-592	Wire End Fitting	
A-850	Drive Shaft	
A-851	Clutch Hub	
A-911	Drive Pulley Cover	
A-918	Motor Base Support	
A-919-A	Motor Base Shoulder Bolt	
A-1139	Electric Connecting Cord - 30" Long	
AA-924-A	L.V.P. Switch	
AA-924	Starting Switch Assembly	Old Style
A-1201	Starting Switch Only	Old Style
A-1306	CAP. SCR.	
A-1336	SOC. CAP. SCR. 1/2-13x1 1/4" AOX. CAP SCR.	
A-1321	3/32x3/4 Cotter Pin	

DRAWING A-10,020

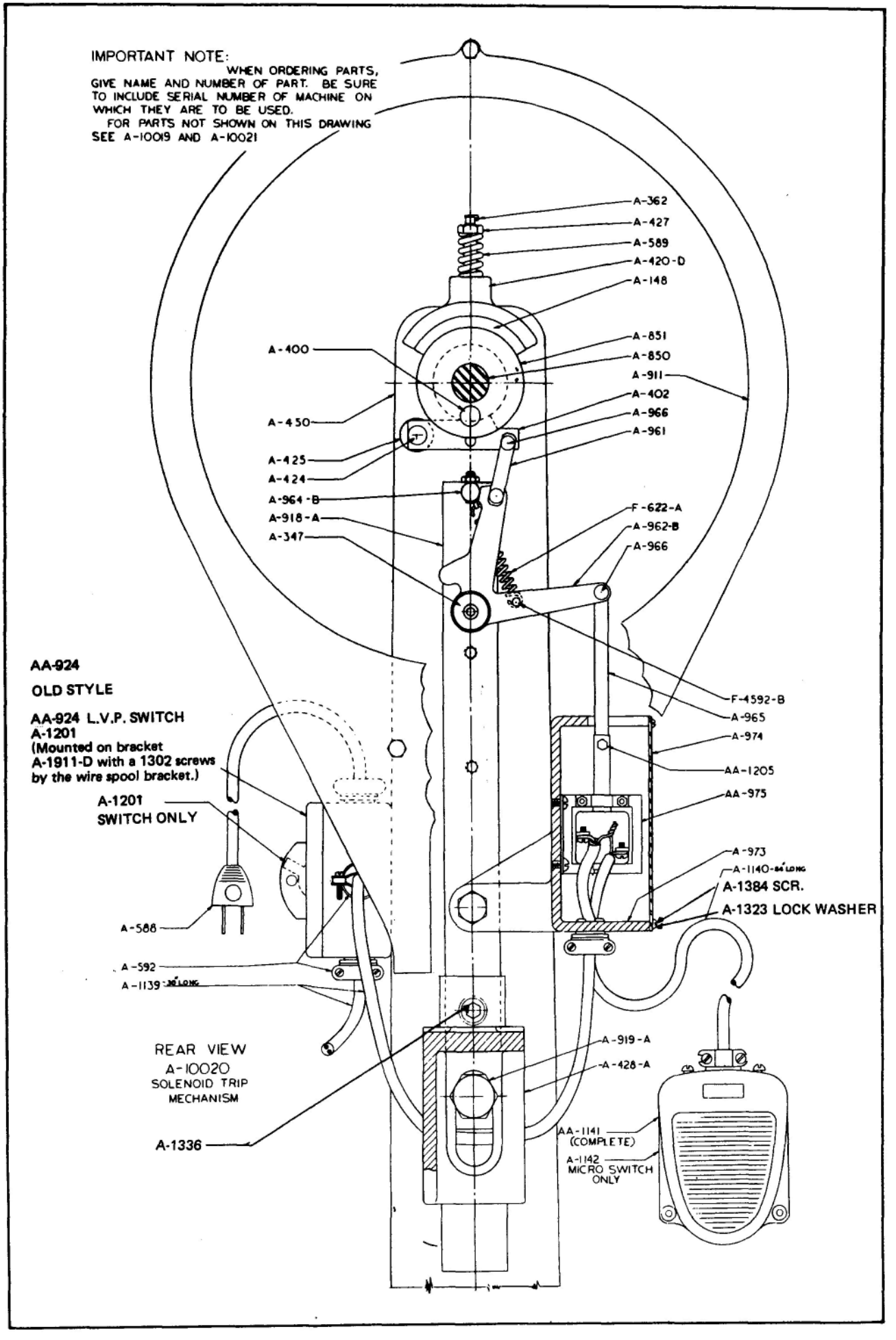

LIST OF PARTS SHOWN ON DRAWING A-10,020
REAR VIEW — SOLENOID TRIP

A-148	Brake Shoe Lining
A-347	Washer
A-362	Oil Hole Cover
A-400	Clutch Pin
A-402	Clutch Latch
AA-420-D	Brake Shoe with Lining A-148
A-424	Clutch Latch Pin
A-425	Clutch Latch Spacer
A-427	Brake Adjusting Screw
A-428-A	Motor Bracket
A-450	Stand
A-588	Motor Cord & Plug
A-589	Brake Shoe Spring
A-592	Wire End Fitting
A-850	Drive Shaft
A-911	Drive Pulley Cover
A-918-A	Motor Base Support
A-919-A	Motor Base Shoulder Bolt
A-961	Clutch Toggle Link
A-962-B	Clutch Toggle Lever
A-964-B	Clutch Toggle Lever Stop
A-965	Solenoid Connecting Link
A-966	Stud
A-971	Micro Switch Only
A-973	Solenoid Housing
A-974	Cover - Solenoid Housing
A-1139	Electric Connecting Cord - 30" Long
A-1140	Electric Connecting Cord - 84" Long
F-622-A	Toggle Lever Spring
F-4592-B	Spring Pin

SUB ASSEMBLIES

AA-924	L.V.P. Switch	
AA-924	Starting Switch Assembly	Old Style
A-1201	Starting Switch Only	Old Style
AA-975	Solenoid Assembly	
A-1210	Stator	
A-1211	Core	
A-1212	Coil	
AA-1141	Foot Operated Switch Assembly	
A-1142	Micro Switch	
AA-1205	Solenoid Connecting Bold Assembly	
A-1336	SOC. CAP. SCR. 1/2-13x1 1/4" SOC. CAP.	
A-1384	SCR. 1/4"-20x1/2" RD. HD.	
A-1223	1/4" Lock Washer	

IDEAL LATE STYLE — SINGLE PEDAL FOR CARTON BOTTOM STITCHING

INSTRUCTION FOR SETTING

Place Clincher Post Treadle A-698C in Stitching position as illustrated — adjust Screw "A" to locate Clincher Block A-437 so that staple will clinch just ahead of the center of Clincher Block. Then adjust Eccentric Bushing A-697 by loosening Screw "B" until Post is locked firmly on high of Cam A-695C between Roller A-696 and Screw "A".

Screw "C" is adjusted so that Clutch is released to permit stitching when Treadle Lever is in position marked Stitching.

Pin A-1074 is only used when Post is locked in Upright Position to do Flat Stitching.

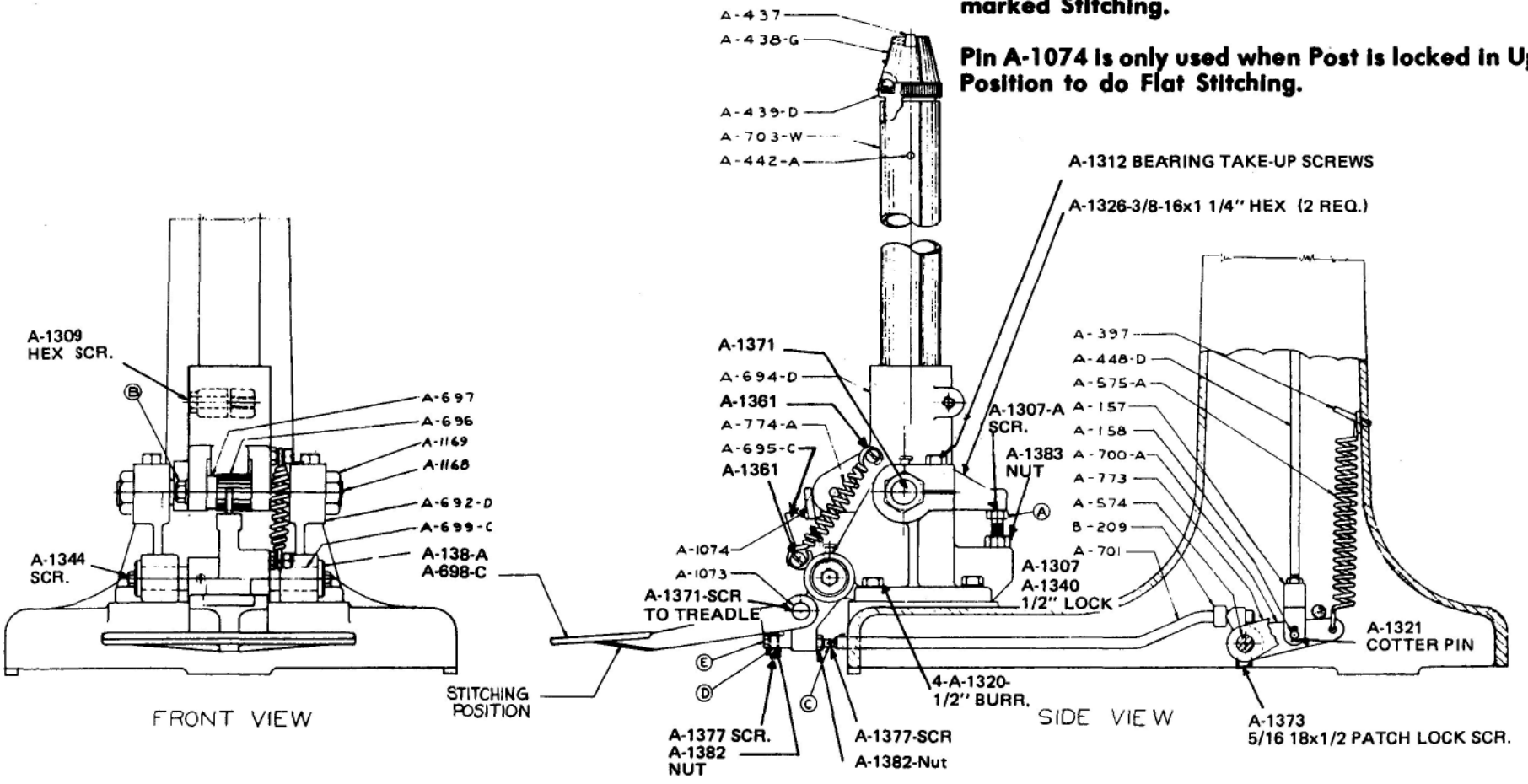

IDEAL LATE STYLE – SINGLE PEDAL FOR CARTON BOTTOM STITCHING #A-10009-AB

No.	
A-138	Washer
A-157	Clevis–Clutch Rod
A-158	Clevis Pin–Clutch Rod
B-209	Set Collar
A-397	Taper Pin #4 x 2"
A-437	Clincher Block
A-438-G	Clincher Block Holder
A-439-D	Clincher Block Adj. Nut
A-448-D	Clutch Shifter Rod
A-574	Clutch Shifter Shaft
A-575-A	Shifter Rod Arm Spring
A-692-D	Clincher Post Base
A-694-D	Clincher Post Bracket
A-695-C	Clincher Post Cam
A-696	Clincher Post Cam Roll
A-697	Cam Roll Bushing
A-698-C	Treadle
A-699-C	Treadle Shaft
A-700-A	Clutch Shifter Rod Arm
A-701	Clutch Operating Rod
A-703-W	Clincher Post
A-773	Clutch Shifter Arm Stop Lever
A-774-A	Clincher Post Spring
A-1073	Treadle Pin
A-1074	Pin To Hold Post in Stitching Position (Use For Stitching Flat Work Only)
A-1168	Clincher Post Bracket Trunnion
A-1169	Hex Nuts for Trunnion (2 required)
A-1344	Hex SCR. 3/8-16x1/2" Hex
A-1307	Hex SCR. 1/2-13x 1 1/4" Hex Base SCR.
A-1309	Hex SCR. 1/2-13x2" HexPost Brkt.
A-1361	3/8" Groove Pin
A-1312	3/8"-16x 1 3/4" Hex Base Bearing Take Up SCR.
A-1326	3/8-16x 1 1/4" Hex Post Brkt. SCR. to Lock Trunnion Bolt A-1168
A-1340	1/2" Lock Washer
A-1371	1/4"-20x1/4" SOC. Set SCR. for Treadle
A-1321	3/32x3/4" Cotter Pin
A-1377	3/8-16x1 SOC. Set SCR.
A-1382	3/8-16-Jam Nut
A-1320	1/2" Burr to Hold Foot Cover Guard
A-1383	1/2-13 Jam Nut to Lock Post Brkt. Stop.
A-1307-A	1/2-13x1 3/4" Hex SCR. Post Brkt. Stop.

DRAWING ON 45° ANGLE HEAD AND OPEN HEAD DEVICE

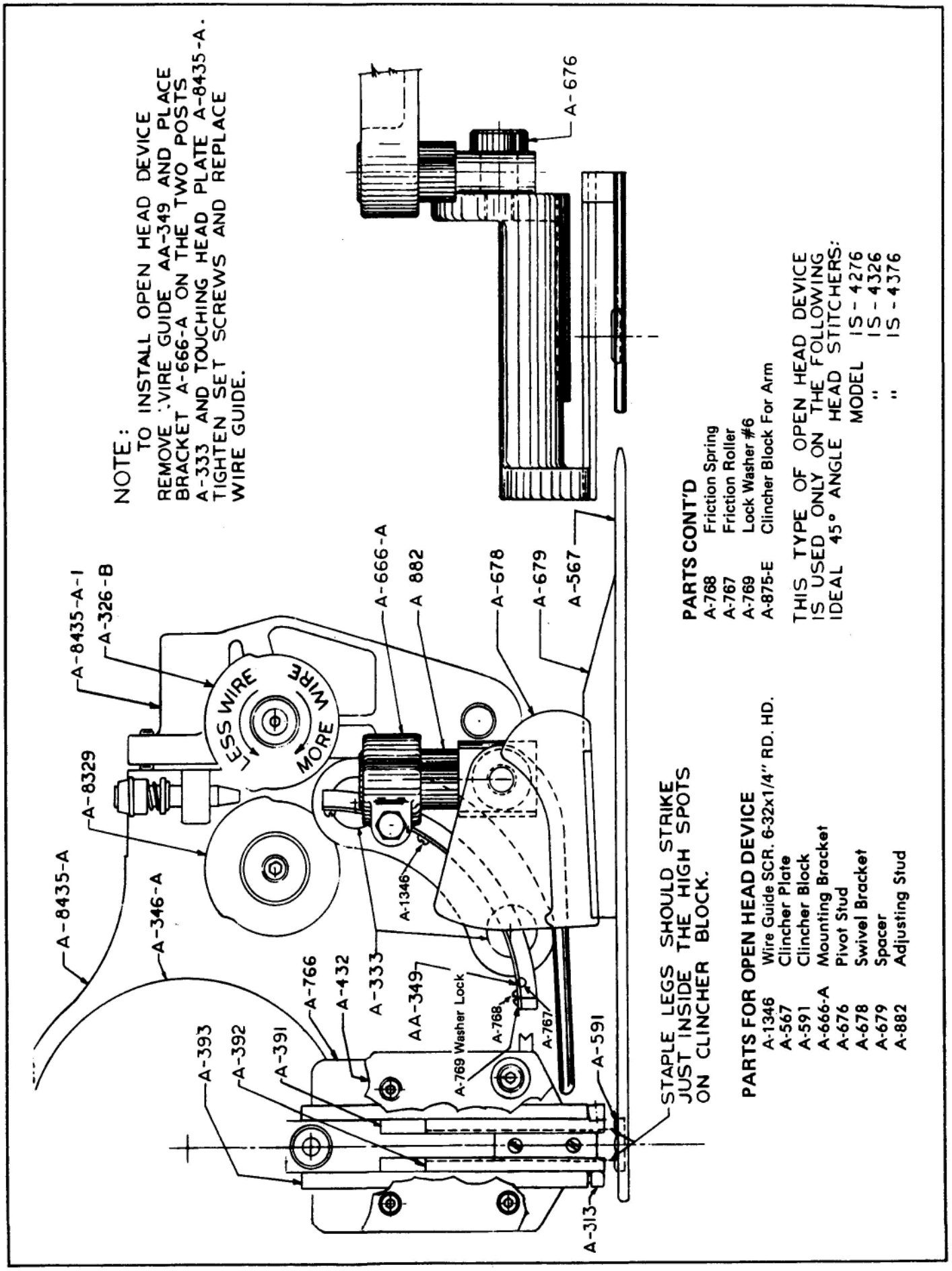

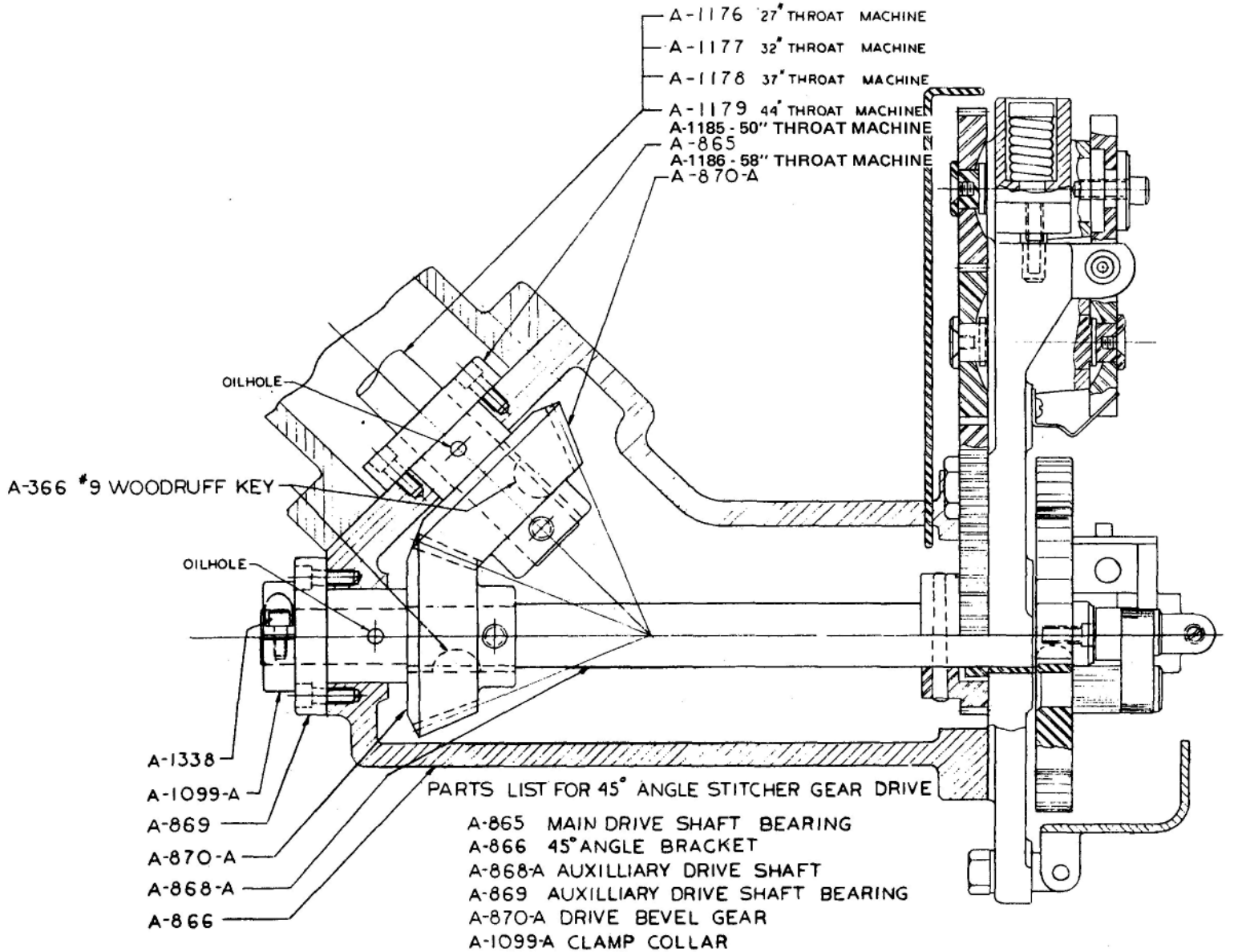

PARTS LIST FOR 45° ANGLE STITCHER GEAR DRIVE

A-865 MAIN DRIVE SHAFT BEARING
A-866 45° ANGLE BRACKET
A-868-A AUXILLIARY DRIVE SHAFT
A-869 AUXILLIARY DRIVE SHAFT BEARING
A-870-A DRIVE BEVEL GEAR
A-1099-A CLAMP COLLAR
A-1176 MAIN DRIVE SHAFT 27" THROAT MACHINE
A-1177 MAIN DRIVE SHAFT 32" " "
A-1178 MAIN DRIVE SHAFT 37" " "
A-1179 MAIN DRIVE SHAFT 44" " "
A-1338 CLAMP COLLAR SCREW

A-1185 50" MAIN SHAFT
A-1186 58" MAIN SHAFT
A-1185 58" THROAT MACHINE

A-1186 58" THROAT MACHINE

IDEAL THIN BLADE ASSEMBLY

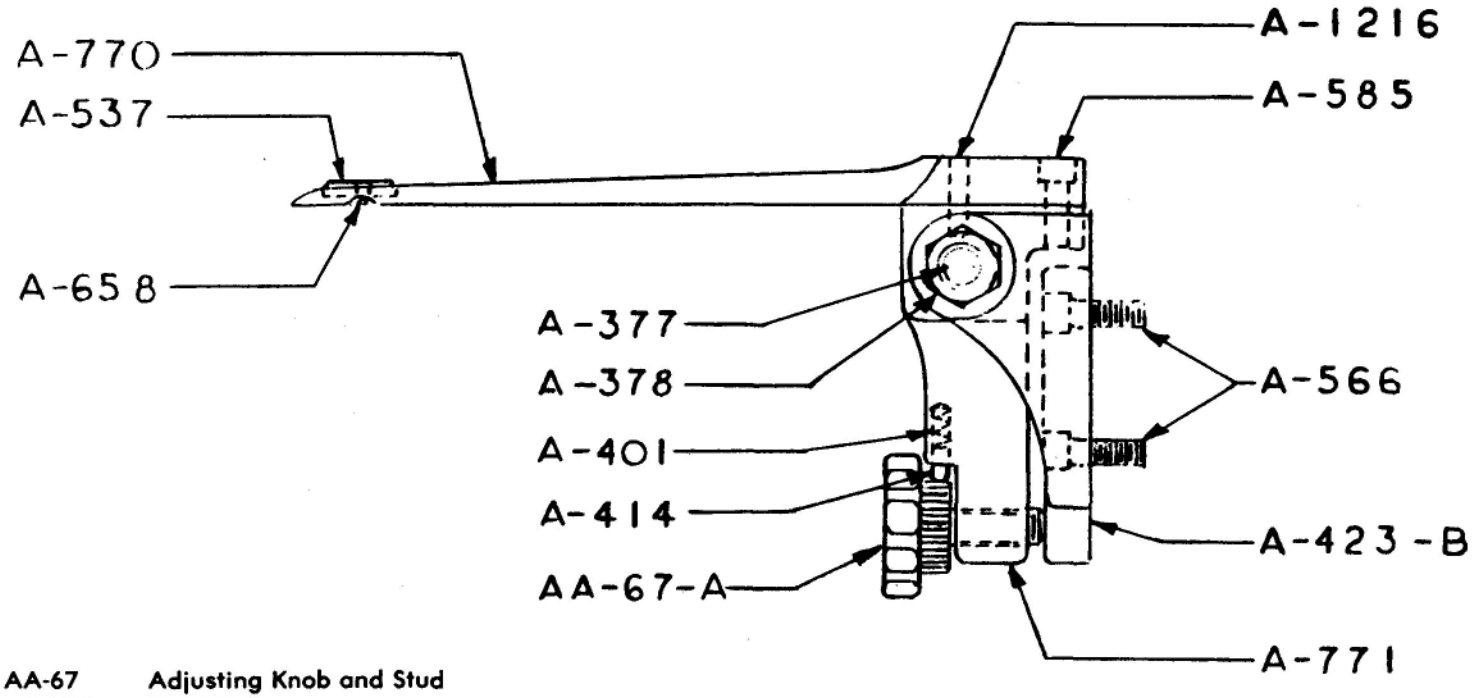

AA-67	Adjusting Knob and Stud
A-377	Pivot Bolt
A-378	Pivot Bolt Nut
A-401	Spring
A-414	Knob Lock Pin
A-423-B	Arm Support Bracket
A-537	Clincher Block
A-566	Arm Bracket Screw
A-585	Cap Screw
A-658	Clincher Block Screw
A-770-12	12" Thin Blade
A-770-20	20" Thin Blade
A-770-25	25" Thin Blade
A-771	Blade Pivot Bracket
A-1216	Dowel Pin

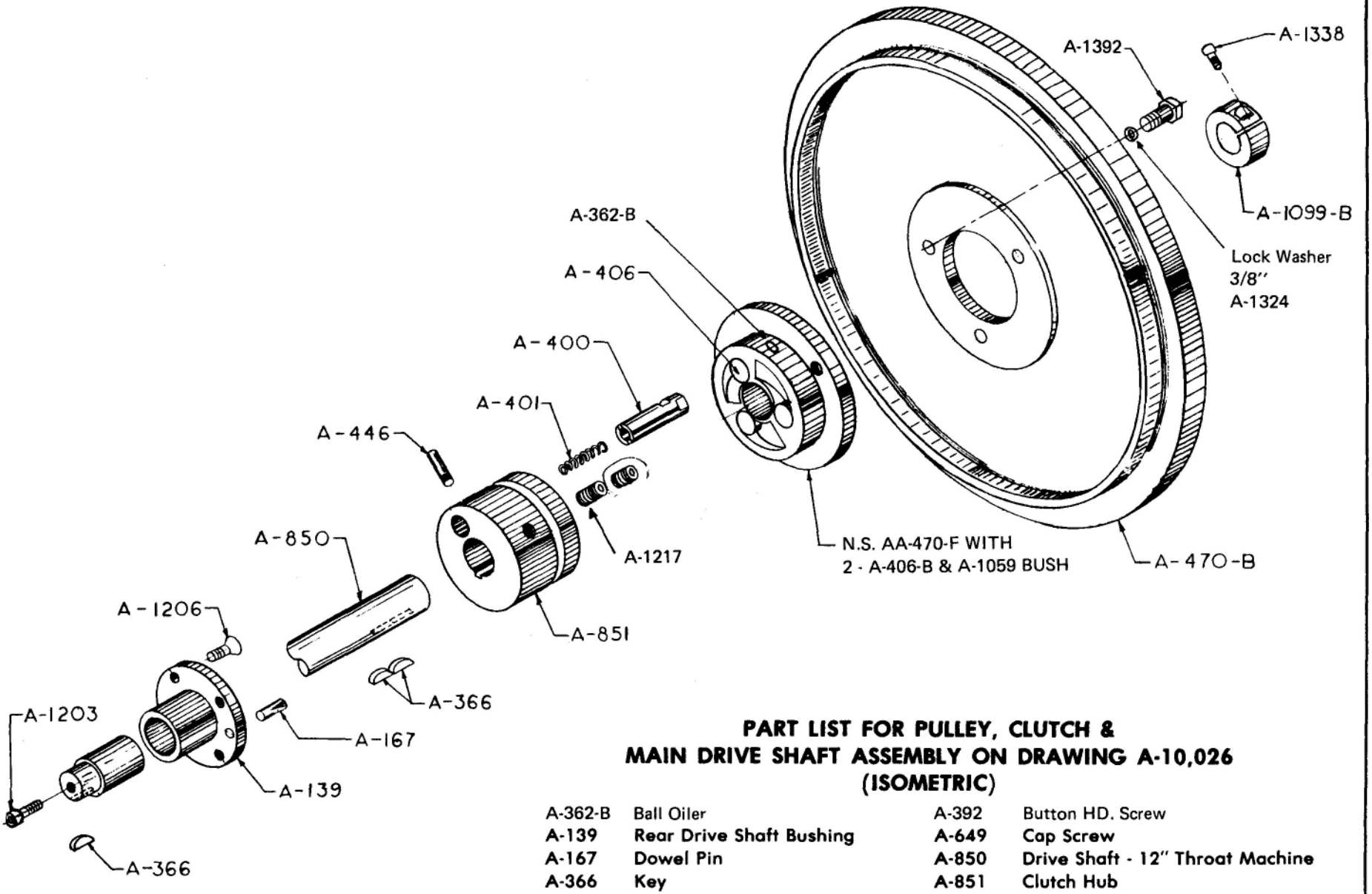

PART LIST FOR PULLEY, CLUTCH & MAIN DRIVE SHAFT ASSEMBLY ON DRAWING A-10,026 (ISOMETRIC)

A-362-B	Ball Oiler	A-392	Button HD. Screw
A-139	Rear Drive Shaft Bushing	A-649	Cap Screw
A-167	Dowel Pin	A-850	Drive Shaft - 12" Throat Machine
A-366	Key	A-851	Clutch Hub
A-400	Clutch Pin	A-1099-B	Split Collar
A-401	Clutch Spring	A-1203	Washer Screw
A-406	Drive Pulley Clutch Pin	A-1206	Bushing Screw
A-446	Clutch Spring Retaining Screw	A-1209	Set Screw
A-470-B	Drive Pulley	A-1218	Set Screw
A-470-F	Drive Pulley Hub with A-1059 Bush	A-1338	Collar Cap Screw
		A-1342	3/8" Lock Washer

MAINTENANCE TROUBLE SHOOTING AND ADJUSTMENTS

The Maintenance, Trouble Shooting and Adjustment information in this section plays a very important role in eliminating or reducing production line down time.

The various kinds of mechanical trouble that may occur in your stitcher are described below.

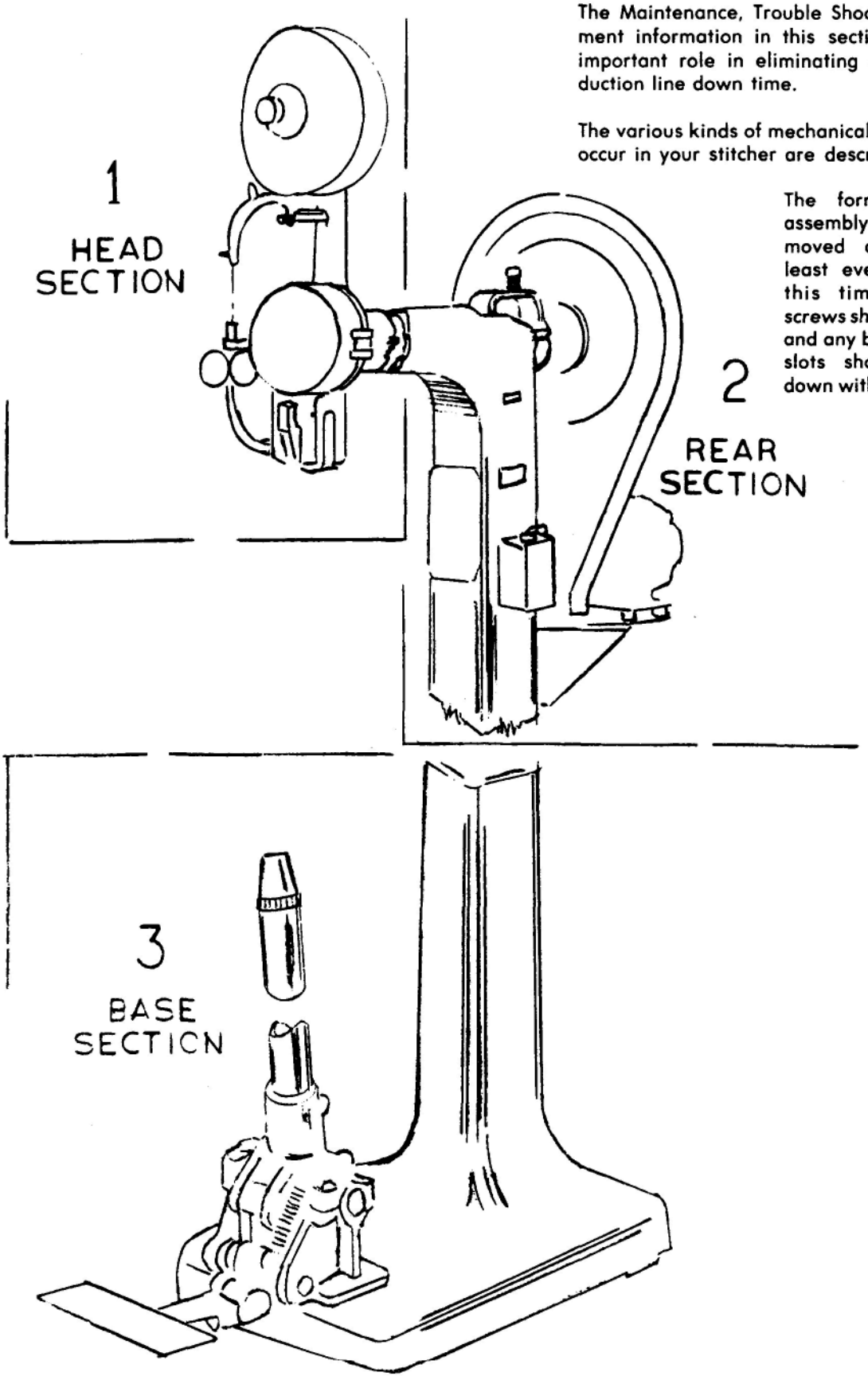

The former and driver assembly should be removed and cleaned at least every 30 days. At this time, the former screws should be tightened and any burrs in the screw slots should be rubbed down with emery cloth.

AA-662D / 25 POUND CONTROLLED WIRE COIL HOLDER

Can also be used with 5 and 10 pound coils.

Numbers following the D letters on parts list. . . *show on parts photograph . . .*

A-662-D-7A	Bearing, Oilite
A-662-D-9	Rear Plate, Spool Holder
A-662-D-11	Lock Washer, Main Shaft
A-662-D-12	Spring, Wire Tension Control
A-662-D-13	Braking Block, Tension Spring
A-662-D-14	Shaft, Braking Block
A-662-D-15	Lock Ring, Main and Block Shaft
A-662-D-16	Stud, Brake Swivel Connecting
A-662-D-17	Lock Nut, Brake Tension Adjusting Screw
A-662-D-18	Lock Ring, Brake Belt Anchor Stud
A-662-D-19	Plunger, Brake Tension Spring
A-662-D-20	Spring, Brake Tension
A-662-D-21	Screw, Brake Tension Adjusting
A-662-D-22	Main Casting, Spool Bracket (R.H.)
A-662-D-22L	Main Casting, Spool Bracket (L.H.)
A-662-D-23	Stud, Brake Belt Anchor
A-662-D-24	Mount, Spool Bracket (Inland)*
A-662-D-25	Belt Assembly, Brake w/Swivel
A-662-D-26	Stud and Lock Nut, Brake Tension Swivel
A-662-D-27	Lock Ring, Brake Swivel Stud
A-662-D-28	Spacer, 3-3/4" Core
A-662-D-30	Screw, Flat Head (2-1/2" Core)
A-662-D-31	Screw, Flat Head (3-3/4" Core)
A-662-D-33	Screw, Flat Head
A-662-D-34	Cap Screw, Hex Head (Inland 2" length) (Bliss 1-1/2" length)
A-662-D-35	Lock Washer
A-662-D-36	Face Plate, Spool Holder
A-662-D-37	Roll Pin, Face Plate Release Assy.
A-662-D-38	Lock Ring, Face Plate Release Assy.
A-662-D-39	Shaft, Face Plate Release Assy.
A-662-D-40	Spring, Face Plate Release Assy.
A-662-D-41	Knob, Face Plate Release Assy.
A-662-D-42	Set Screw, Knob
A-662-D-43	Set Screw, Spacer (3-3/4" Core)
A-662-D-44	Cam, Spool Lock
A-662-D-45	Set Screw, Brake Swivel Connecting Stud
A-662-D-46	Set Screw, Main Shaft
A-662-D-47	Set Screw, Brake Belt Anchor Stud
A-662-D-48	Shaft, Main Spool
A-662-D-49	Set Screw, Brake Block Shaft
A-662-D-50	Roll Pin, Block Stop
A-662-D-51	Mount, Spool Bracket
A-662-D-52	Mount, Spool Bracket

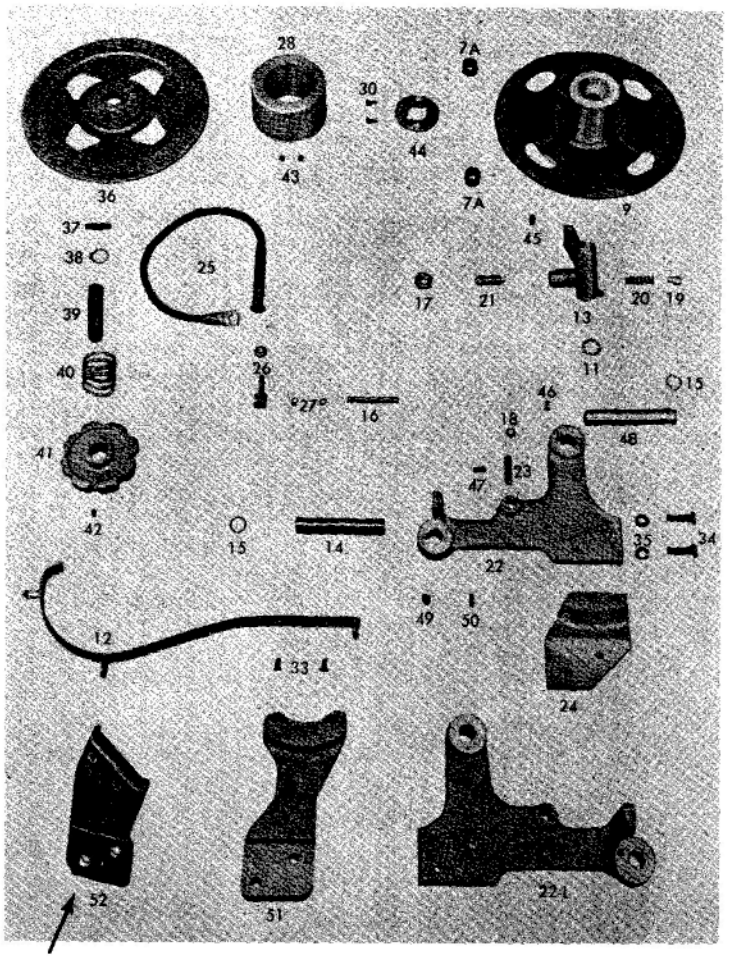

2 Screws
5/16-18x1" Long
HEX HD. SCR.

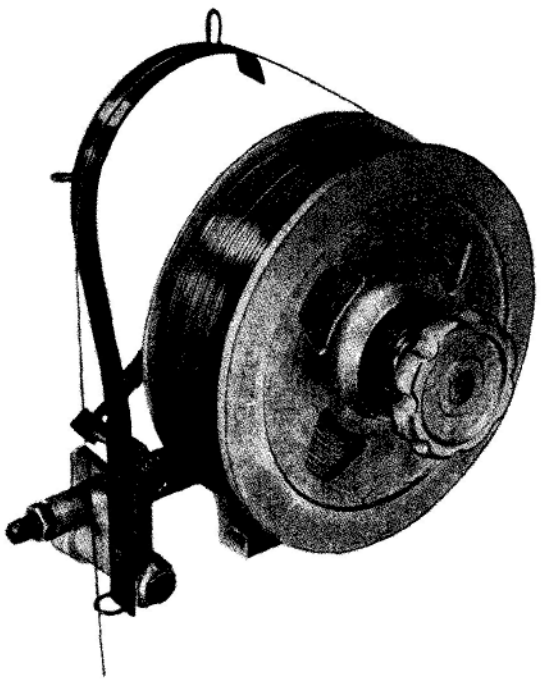

DRAWING A-10025-B

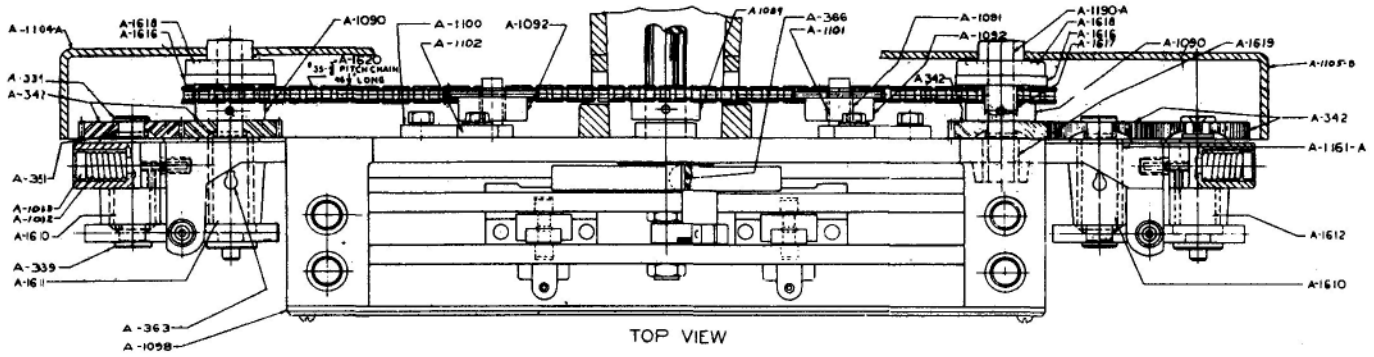

TOP VIEW

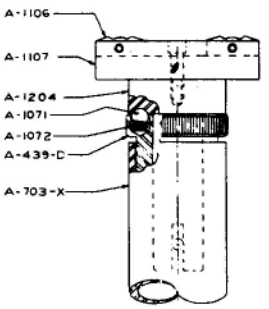

CLINCHER POST

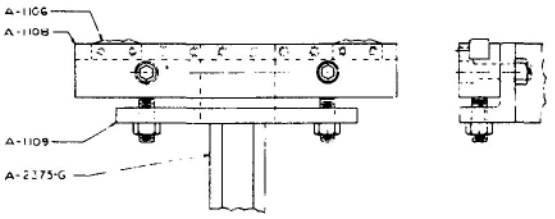

CLINCHER ARM

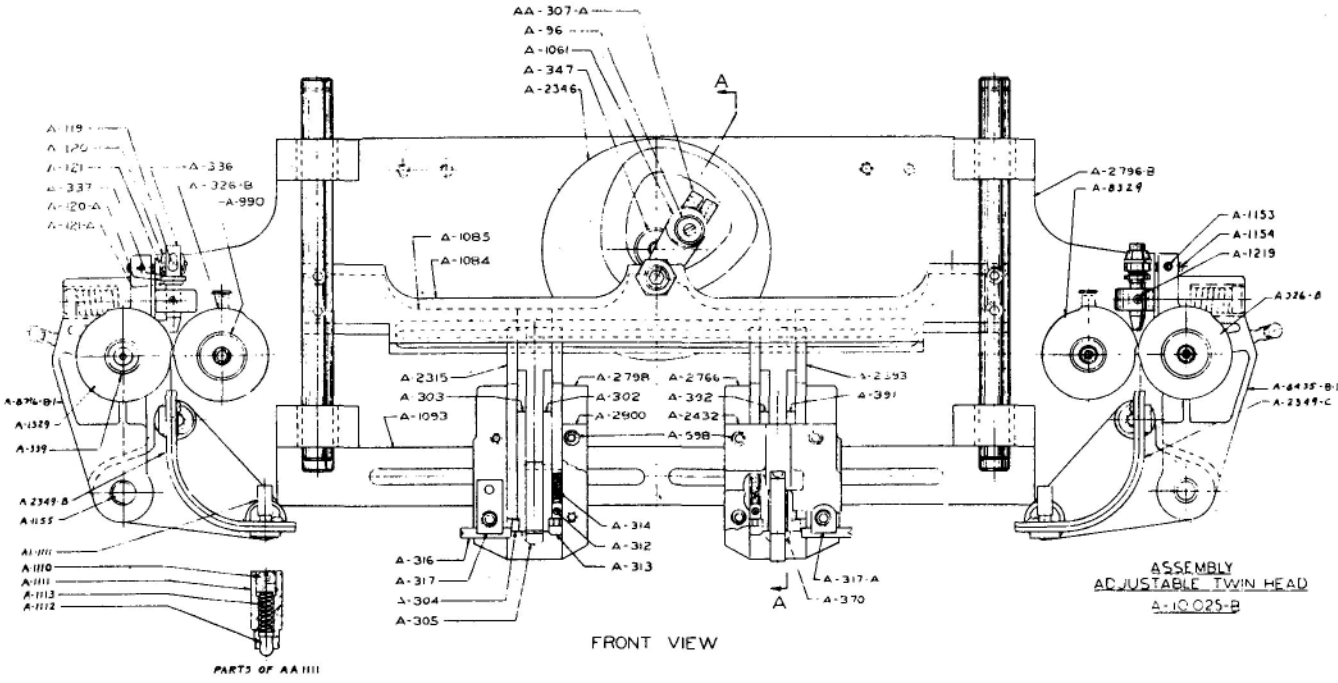

FRONT VIEW

PARTS OF AA 1111

ASSEMBLY
ADJUSTABLE TWIN HEAD
A-10025-B

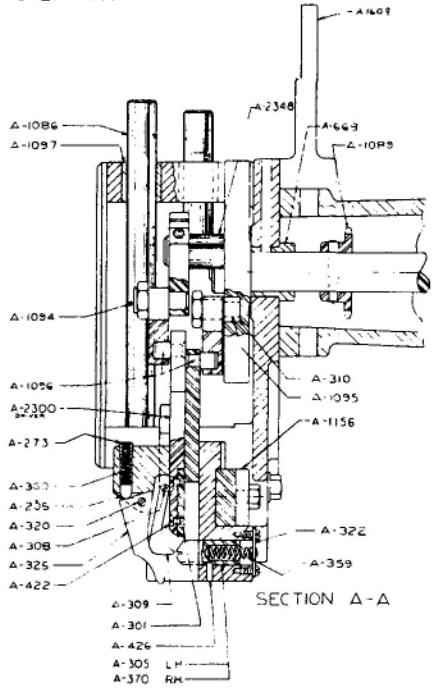

SECTION A-A

LIST OF PARTS SHOWN ON DRAWING A-10025-B
ADJ. TWIN HEAD ASSEMBLY

A-96	Drive Connection Washer
A-119	Wire Check Pin
A-120	Wire Check Sleeve
A-120-A	Wire Check Washer
A-121	Wire Check Pin Retainer
A-121-A	Wire Check Spring Retainer
A-205	Supporter Plunger Spring Pin
A-273	Supporter Plunger Set Screw
A-301	Driver End
A-302	Former Leg Rt. Hd.
A-303	Former Leg. Lt. Hd.
A-304	Cutter Blade
A-305	Anvil Lt. Hd.
AA-307-A	Adj. Driver Connection
A-308	Supporter Stud
A-309	Supporter
A-310	Former Roller
A-312	Former Plunger Screw
A-313	Former Plunger
A-314	Former Plunger Spring
A-316	Cutter Tube
A-317	Cutter Tube Clamp Lt. Hd.
A-317-A	Cutter Tube Clamp Rt. Hd.
A-320	Supporter Plunger Pivot Pin
A-322	Anvil Spring Plate
A-325	Supporter Plunger
A-326-B	Rt. Hd. Feed Wheel
AA-336	Wire Check Complete
A-336	Wire Check Body Only
A-337	Wire Check Spring
A-339	Feed Wheel Washer Lt. Hd.
A-342	Feed Wheel Gear
A-347	Former Cam Retaining Washer
A-351	Feed Wheel Drive Pin
A-359	Anvil Spring
A-360	Supporter Plunger Spring
A-363	Oil Hole Cover
A-370	Anvil Rt. Hd.
A-391	Former Leg Rt. Hd.
A-392	Former Leg Lt. Hd.
A-422	Cutter Blade or Driver End Screw
A-426	Anvil Stop Pin
A-439-D	Clincher Block Adj. Nut
A-598	Face Plate Screws
A-668	Head Plate Bushing
A-703-X	Clincher Post
A-990	Feed Wheel Washer Rt. Hd.
A-1061	Eccentric Driver Connection Bushing
A-1071	Ball, Clincher Block Adj. Nut
A-1072	Spring, Clincher Block Adj. Nut
A-1082	Feed Roll Hinge Spring
A-1083	Feed Roll Shoulder Bolt
A-1084	Driver Bar
A-1085	Former Bar
A-1086	Guide Bar Shaft
A-1089	Drive Sprocket
A-1090	Feed Roll Drive Sprocket
A-1091	Idler Sprocket Bronze Bushing
A-1092	Idler Sprocket
A-1093	Slide Box Bar
A-1094	Driver Pin
A-1095	Former Bar Pin
A-1096	Driver Pin or Former Pin
A-1097	Guide Rod Bushing
A-1098	Front Cover Guard
A-1100	Idler Gear Take-Up Bracket
A-1101	Pin for Take-Up Bracket
A-1102	Idler Gear Bracket Clamp
A-1104-A	Lt. Hd. Gear Guard
A-1105-B	Rt. Hd. Gear Guard
A-1106	Clincher Block
A-1107	Clincher Block Holder for Post
A-1108	Clincher Block Holder for Arm
A-1109	Clincher Arm End Angle
AA-1111	Wire Friction Tube Complete
A-1110	Wire Feed Tube Friction Screw
A-1111	Wire Feed Tube Friction Body
A-1112	Wire Feed Tube Plunger
A-1113	Wire Feed Tube Plunger Spring
A-1153	Feed Roll Hinge Set Screw
A-1154	Feed Roll Hinge Screw
A-1155	Feed Roll Hinge Pin
A-1156	Slide Box Clamp
A-1161-A	Feed Roll Shaft Bushing
A-1190-A	Idler Gear Shaft
A-1204	Clincher Head
A-1219	Wire Check Set Screw
A-1609-R	Wire Spool Bracket - Rt. Sd.
A-1609-L	Wire Spool Bracket - Lt. Sd.
A-1610	Feed Roll Shaft
A-1611	Feed Roll Shaft
A-1612	Feed Roll Shaft
A-1616	Flange Brg. Plate
A-1617	Flange Brg. Plate Stud
A-1618	Flange Bearing
A-1619	Idler Shaft Bushing
A-1620	Feed Roll Drive Shaft
A-2300	Driver Bar with Square Pin
A-2315	Former Housing Lt. Hd.
AA-2315	Former & Driver Complete - Lt. Sd.
A-2346	Former Cam
AA-2346	Former Cam with Stud A-2348
A-2348	Former Cam Stud
A-2349-B	Wire Feed Tube Lt. Sd.
A-2349-C	Wire Feed Tube Rt. Sd.
A-2375-G	Clincher Arm
A-2393	Former Housing Rt. Hd.
AA-2393	Former & Driver Complete - Rt. Sd.
A-2432	Rt. Hd. Face Plate
AA-2432	Rt. Hd. Face Plate Complete
A-2766	Rt. Hd. Slide Box
A-2796-B	Head Plate
A-2798	Lt. Hd. Slide Box
A-2800	Lt. Hd. Face Plate
AA-2800	Lt. Hd. Face Plate Complete
A-8329	Lt. Hd. Feed Wheel
A-8435-B-1	Rt. Hd. Feed Roll Hinge
A-8796-B-1	Lt. Hd. Feed Roll Hinge

CAUTION: DISCONNECT POWER SOURCE BEFORE SERVICING OR ADJUSTING

(1) HEAD

Trouble Shooting

TROUBLE	POSSIBLE CAUSE
A. Defective Stitches	
1. One or both legs buckled 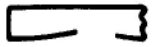 *NOTE: Since buckled legs are often concealed by the board and may appear the same as a short leg, always remove two or more stitches to see which condition is occurring.*  2. Wrinkled crown	1. Clincher block is worn or improperly aligned 2. Insufficient compression 3. Unequal leg length 4. Burred stitch leg 5. Incorrect wire size 6. Insufficient arc in wire 7. Worn former legs 8. Broken plunger spring 9. Worn anvil
3. One leg is consistently too short or too long 	1. Right-hand feed wheel improperly adjusted —single-head stitcher 2. Right-hand feed wheel improperly adjusted —dual-head stitcher
4. Varying leg length 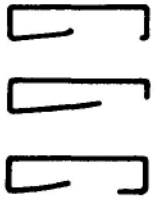	1. Excessive tension on nut of 10-pound coil holder 2. Excessive brake tension on 25-pound coil holder 3. Dirty or worn check pawl 4. Broken tension spring on 10-pound coil holder 5. Broken wire guide assembly on 25-pound coil holder 6. Excessive tension on wire straightener 7. Wire guide friction not operating 8. Former plunger not operating
5. Corner of crown distorted or fractured 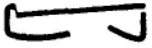	1. Excessive compression 2. Broken driver end 3. Worn former legs 4. Clincher block improperly aligned or worn 5. Incorrect wire size 6. Worn anvil
6. Stitch crown not flat and legs not bent back into board 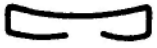	1. Insufficient compression

TROUBLE	POSSIBLE CAUSE
D. Broken cutter tube	
	1. Tube has been improperly inserted 2. Dull tube or cutter blade
E. Sheared screws on cutter blade	
	1. Tube has been improperly inserted 2. Dull tube or cutter blade
F. Machine speed is less than normal	
	1. Loose V-belt 2. Motor failure 3. Incorrect motor size 4. Brake bracket too tight
G. Stitch is driven before clincher block is in position	
	1. Roller lever is improperly adjusted on mechanical post 2. Post set screw is improperly adjusted on Electro-Power Post

(2) REAR

A. Clicking noise	

NOTE

Always drive one stitch under power since clicking noise will normally occur when motor is turned on after machine has been turned over by hand.

	1. Broken clutch pin 2. Broken clutch pin spring 3. Worn drive pins 4. Brake is improperly adjusted
B. Rapid wear of V-belt	
	1. Improper tension 2. Motor pulley improperly aligned with main drive wheel 3. Oil on V-belt

7. One or both legs turn out 	1. Clincher block improperly aligned 2. Dull or improperly adjusted cutter blade and tube 3. Loose post
8. Flat piece of wire	1. Former plunger is not operating 2. Broken anvil spring 3. Excessive tension on nut of 10-pound coil holder 4. Excessive brake tension on 25-pound coil holder
9. Stitches come out in pieces 	1. Former plunger is not operating 2. Cutter tube has been improperly inserted 3. Incorrect wire size
10. Both stitch legs are either too long or too short 	1. Improper size of cutter blade

Trouble Shooting

TROUBLE	POSSIBLE CAUSE

B. Wire buckles between the feed wheels and wire guide.

	1. Machine operated without work under head 2. Dull or incorrectly adjusted cutter blade or tube 3. Short wire draw 4. Incorrect timing on dual-head stitcher 5. Incorrect timing on single-head stitcher 6. Worn or flattened former roller 7. Wire straightener out of adjustment 8. Former plunger is not operating 9. Wire guide friction is not operating

C. Wire tangles on coil holder

	1. Loose brake on 25-pound coil holder 2. Nut on 10-pound coil holder is too close 3. Side plate not screwed on tight

C. Motor hums or grinds

	1. Check to see if motor specifications are the same as your power supply

D. Stitcher repeats without pressure on the foot pedal

	1. Brake is too loose 2. Excessive oil on clutch hub 3. Broken clutch pin 4. Broken clutch plate 5. Main drive wheel is frozen on drive shaft

(3) BASE

A. Machine won't stitch when foot pedal is pressed as far as possible

	1. Set screw on foot pedal requires adjusting 2. Stitcher is not placed on a level floor 3. Worn clutch plate 4. Defective micro-switch or electric trip 5. Loose wire connection on micro-switch or electric trip 6. Defective solenoid

B. Post does not return or returns slowly when pressure is removed from foot pedal

	1. Pivot stud is too tight on mechanical post 2. Pivot stud is too tight on Electro-Power Post 3. Clincher post spring is too weak on mechanical post 4. Clincher post spring is too weak on Electro-Power Post 5. Clincher post is not lubricated

MAINTENANCE

(A) CUTTER BLADE AND CUTTER TUBE — The cutter blade and tube cut the wire prior to the forming of the stitch. To insure a good clean cut of the wire, the cutter blade part No. A-304 and the cutter tube part A-316 must be kept sharp and the cutter tube properly inserted in the slide box A-798. The cutter tube should always be inserted with the slot towards the back of the machine. Always check both of these parts, since they operate as a unit. Replacing one and leaving the other dull, will not remedy the trouble. The blade part No. A-304 is reversible and both cutting edges should be used before replacing.

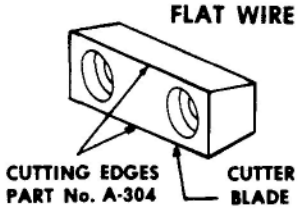

The lower edge of a dull cutter tube part No. A-316 will often snap off because the wire does not shear off properly and sometimes becomes wedged between the cutter tube and the blade. Occasionally a heavy burr on the end of the wire will cause it to stick in the anvil part No. A-305. This in turn, will result in the buckling of the wire between the feed wheels Nos. A-326B and A-8329 and the wire guide AA-349B.

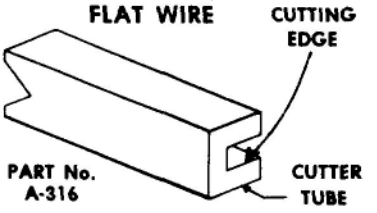

The tube can be removed by releasing or loosening the cutter tube clamp screw A-177. To remove the cutter blade, step on the foot pedal and rotate the main drive wheel part No. A-470-B in the direction indicated by the red arrow until the former and driver unit AA-315 reaches the lowest point of its stroke. Then remove the cutter blade screws A-422. The old cutter blade can now be removed. When re-assembling always replace the cutter blade first and return the machine to neutral by completing the revolution of the main drive wheel, part No. A-470-B. Then insert the cutter tube A-316 with the slot toward the rear of the machine and press lightly against the lower edge of the cutter blade, while tightening the cutter tube clamp screw part No. A-177. This is shown in complete detail on page seven in figure A. Always make the first stitch by hand before turning on the power. If the tube is inserted incorrectly when the machine is not in neutral position it will extend beyond the cutter blade part No. A-304 and cause the tube to break, the cutter blade screws to shear off, or the lower part of the housing below the tube to crack off when the stroke is completed.

For some special stitching applications requiring an unusually short wire draw, a specially hardened left former leg is used as a cutter blade. The left former leg cannot be reversed when it becomes dull (as a cutter blade can) but must be replaced with a new former leg.

(B) CLINCHER BLOCK — The purpose of the clincher block part No. A-437 for the post machine or A-421 for the arm stitcher is to turn back the legs of the stitch after they have penetrated the work material. To do this, the legs must strike the block with equal spacing from the outside edges of the grooves, as shown in figure 1.

To test this alignment, drive five or ten stitches into a section of your work. The high spots on either side of the clincher block will leave impressions on the under side of the material being stitched. It is an easy matter then to see if the space between the point each stitch leg penetrates the board and the impression of the clincher block are equal. If one leg is closer to the impression on the material than the other, the clincher block will require adjustment; either to the right or left.

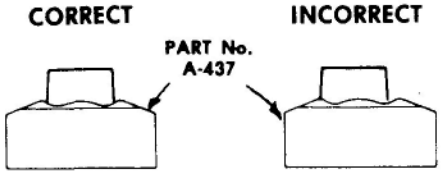

Figure 1

(C) CHECK PAWL — The check pawl part No. AA-336 permits the wire to flow forward into the stitching head but prevents it from moving in a reverse direction when the wire is being cut off. When it does not function properly the wire slips backward and causes short leg stitches. This condition is usually caused by an accumulation of dirt and wire chips which prevents the small rollers that grip the wire from moving freely.

To clean, remove the wire from the pawl by pressing down on the sleeve and pushing the wire down slightly. Then pull the wire out and withdraw from the check pawl. The check

pawl part No. AA-336 can now be removed by removing the lock screw part No. A-1219 shown on drawing A-10,028 page 7. Clean the pawl by shaking it in any grease cutting agent. After cleaning and drying, insert a 6" piece of wire in the pawl and attempt to pull it in the reverse direction. If all the dirt has been removed and it continues to slip, replace with a new part.

(D) SPOOL HOLDER TENSION AND BRAKE ADJUSTMENT — All Ideal wire stitchers are equipped with 10-pound wire coil holders as standard equipment. This coil holder can be used with either five or ten pound coils and the braking feature is automatic after the coil holder is placed in position and the stud part No. A-132 and lock nut A-673 are adjusted as recommended on page 7 drawing A-10,028. This appears on the upper right hand corner of the drawing.

Figure 2

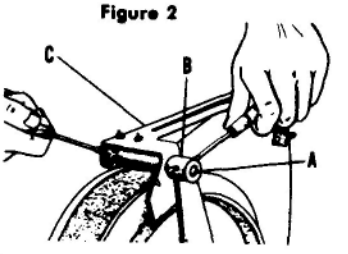

25-POUND COIL HOLDER, BRAKE ADJUSTMENT — This is made before shipment. If further adjustments are necessary, use two screw drivers, with the one in the right hand held securely in brake shaft (Index A, figure 2). Left hand operates screw driver to loosen set screw (Index B, figure 2). Turn brake bracket shaft clockwise to tighten brake-counter-clockwise to loosen brake.

Brake pressure must not be too tight. However, there should be sufficient tension to apply the brake smoothly and prevent the wire coil from over-running.

To adjust the brake: (1) Turn the brake bracket shaft counterclockwise until the wire guide assembly (Index C, figure 2) falls limp. (2) Turn the brake bracket shaft clockwise until the slack is removed and the brake shoe is just touching the brake drum. (3) Make one more full turn on the brake bracket shaft. (4) Tighten set screw.

Be sure that the brake drum is kept clean. Dirt and rust will cause the brake to grab and prevent the coil holder from coming to a smooth, gradual stop.

If the wire guide assembly is broken, the brake on the coil holder will not function. Replace the wire guide assembly.

(E) FORMER PLUNGER — Former plunger part No. A-313 holds the end of the wire firmly while it is being cut off by the cutter blade part No. A-304. Without this pressure, the wire would spring forward. This causes (1) a short left stitch leg or (2) a long right stitch leg or (3) the wire to fall out of the anvil part No. A-305, as a straight piece or (4) the wire to slip to one side so that it does not line up with the grooves in the former legs.

To test the operation of the former plunger: (1) step on the foot pedal and turn the drive wheel A-470-B in the direction of the red arrow until the former and driver assembly part No. AA-315 is at the lowest point of its stroke, (2) apply upward pressure with your finger on the former plunger. This should cause the plunger to retract easily into the former housing part No. A-315 and spring outward when released.

If the plunger is stuck in the housing, loosen the plunger screw A-312 and pry the plunger loose. The plunger often sticks because it is dirty or requires oiling. Place a drop of oil on the plunger each time the rest of the machine is lubricated.

If the plunger is bent, it can usually be straightened. If broken, it must be replaced. A weak or broken plunger spring A-314 will not exert sufficient pressure against the wire. It must be replaced.

A worn plunger blocks the path of the wire as it is being fed. This causes the wire to buckle between the feed wheels and the wire guide. Replace the plunger.

WIRE GRIPPER PIN — Used only in certain applications in place of part No. A-313 former plunger screw, & No. A-314 former plunger spring. The wire gripper pin performs the same function as the former plunger; that is, it holds the wire securely while it is being cut by the cutter blade.

To install Wire Gripper Pin-Type Anvil: (See figure 3)

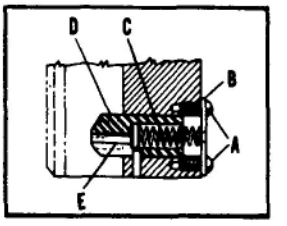

Figure 3

1. Remove former plunger screw, former plunger and former plunger spring.
2. Remove present anvil by loosening anvil plate screws (Index A), removing plate (Index B) and spring (Index C). Insert new anvil (Index D), placing the wire gripper pin (Index E) in place. Use spring from the old anvil to exert pressure on the pin and anvil. (Insert wire gripper pin as a complete unit.)
3. Replace anvil plate and screws.

(F) SUPPORTER PLUNGER SPRING — The supporter part No. A-309 supports the legs of the stitch until they have started to drive into the work material. This is held in position by the supporter plunger part No. A-325. The supporter plunger is backed by the plunger spring part No. A-360.

To test the spring, pull outward on the supporter plunger. If no pressure is required, the spring is broken and should be replaced.

A broken spring can be removed from the face plate by unscrewing the spring retaining screw A-273. After making sure that the supporter plunger pin part No. A-205 is in place, install a new plunger spring. The spring retaining screw should be replaced so that it is flush with the top of the hole in the face plate.

(G) MECHANICAL POST — The function of the post is to provide a rigid support for the clincher block part No. A-437. Any side movement in this part causes the clincher block to be improperly aligned with the stitch legs. For this reason, never move the stitcher by pulling or pushing on the post. There are a number of simple adjustments which can be made on the post by simply referring to page 22 drawing No. A-10,009 AB, which in further detail explains these adjustments.

(H) FORMER LEGS — The former legs part No. A-302 and A-303 perform two functions. No. 1 — they bend the wire over the anvil to form a stitch and No. 2 act as a guide until the stitch is driven into the work material.

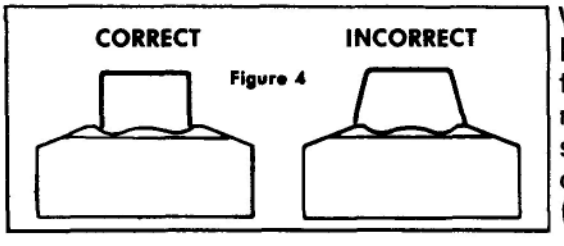

Figure 4

When the former legs become worn, the stitch legs are not bent sharply over the anvil and tend to flare outward instead of staying at approximately right angles to the crown. The legs of the stitch hit the clincher block improperly and buckle or fracture the corner of the crown of the staple. (See Figure 4.)

If the former legs are worn, they must be replaced. Remove the former and driver assembly and then remove the former leg screws A-848.

When installing former legs, screw one leg lightly to the former housing part No. A-315 and leave the second leg loose. Then, with the drive end part No. A-301 loosely attached, insert the driver part A-300 and tighten the both legs and driver end. After all the screws are tightened, the driver bar should fit snugly, but not so tight that you cannot move it up and down in the housing by hand.

Since a worn anvil part No. A-305 can cause similar symptoms, refer to the following paragraph.

(I) ANVIL — After a stitch has been driven, a new length of wire is fed into the stitching head and comes to rest with equal lengths on each side of the anvil. This part forms the support over which the wire is bent into a U shape by the former legs.

Sometimes, the corners of the anvil part No. A-305 become worn from long use. Worn anvil corners prevent the stitch legs from being bent properly. The legs tend to flare out and strike the clincher block improperly. Replace the anvil if it is worn.

The anvil is backed by an anvil spring part No. A-359, which keeps it constantly in position to receive the wire. If this spring breaks and the anvil is not kept in proper position, the wire comes out in a single straight piece.

The anvil can be removed by loosening the two anvil plate screws part A-654 which hold the anvil plate A-322 in place. The spring is removed by the same procedure. Before installing a new anvil or replacing the old one, clean and oil the hole in the slide box in which the anvil fits. If installing a new part, check to see that it is the proper size for your machine by comparing with your old one. There is only one way to insert the anvil since it is slotted on the bottom to receive the anvil stop pin part No. A-426. This pin prevents the anvil from rotating or moving too far forward. After installing, press against the anvil to see that it retracts freely.

Occasionally, a new anvil with sharp corners will cut into the stitches and cause them to crack. Do not try to round off the corners. Return the part to the factory.

Since worn former legs can cause similar symptoms, refer to paragraph H.

(J) INCORRECT WIRE SIZE — The size of wire which should be used varies with the type of work material. If you are in doubt about the correct machine set up to accommodate a change in your material specifications, consult your Ideal Stitcher representative or send samples to our office.

When there has been no change in your stitching job and your stitcher is set to accommodate a certain size of wire, the use of a different size wire will cause defective stitches. Check the wire size which appears both on the shipping case and the inside core liners.

(K) DRIVER END — The driver end A-301 fits into the recessed section of the lower end of the driver bar A-300. It drives the stitch into the work material by applying pressure directly over the stitch legs.

If your machine is equipped for flat wire stitching, the driver end is reversible, providing it is not a special type with radius end. If your machine is equipped for Arcuate Wire Stitching, the drive end is not reversible.

Occasionally, the tip of the driver end is chipped from excessive compression or stitching without work material under the head of the machine. The driver end also wears from normal use. When this happens, the part should be reversed or replaced.

A very loose fit of the driver bar indicates that either this part or the former legs A-302 and A-303 are worn and must be replaced.

(L) CLUTCH PIN — Power from the main drive wheel part No. A-470-B is delivered to the drive shaft A-850 through the engagement of the clutch pin part No. A-400 with the main drive wheel pins part No. A-406-B. This complete assembly can be seen in perfect detail on page 27 drawing No. A-10,026. The clutch pin gradually wears with use and eventually causes a clicking noise. The machine will not stitch when the pin becomes badly worn and does not engage with the main drive wheel pin. The same condition occurs when a broken clutch pin spring part No. A-401 cannot push the clutch pin part A-400 out of the clutch hub part or when the clutch plate A-402 raises a burr on the pin and causes it to stick in the hub.

Occasionally, the machine will continue to stitch because the clutch pin breaks and becomes wedged between the main drive wheel pin A-406 and the clutch hub A-851.

TO REPLACE THE PIN OR SPRING — (1) Remove the pulley guard cover (2) slip off the vee belt and unscrew the cap screw part No. A-649 from the end of the drive shaft. (3) Lift the main drive wheel off the shaft part No. A-850 (4) While holding your hand over the clutch pin part No. A-400 to prevent it from springing forward, step on the foot pedal.

This will release the pin. (5) Push in the new clutch pin, making certain that it works freely and does not bind. BE SURE THAT THE CLUTCH PIN SPRING A-401 is in the clutch pin before inserting it into the clutch. (6) Release the pressure on the foot pedal. You may now reassemble the machine and turn it over by hand to make sure that it is working properly.

(M) DRIVE PINS — Each main drive wheel contains three drive pins part No. A-406. The clutch pin A-400 engages these pins causing the main drive shaft part No. A-850 to rotate. The drive pins wear with use and must be replaced. However, the original pins can be given a quarter turn and used a second time. See Page 27 drawing No. A-10,026 for detail.

To replace or turn the drive pins: (1) remove the guard (2) slip off the vee belt and unscrew the cap screw A-649 from the end of the drive shaft. (3) Lift the main drive wheel A-470-B off the shaft. (4) Insert a drift pin in the holes and knock the drive pins out. (5) Re-insert drive pins. Make sure that the tops are flush with the top surface of the main drive wheel hub part No. A-470-C.

(N) WIRE GUIDE FRICTION — (This part is supplied only with machines that are equipped for flat stitching wire.)

This wire guide friction part No. AA-1111 shown on the head assembly drawings exerts constant pressure on the stitching wire as it passes through the wire guide part No. AA-349-B. This pressure prevents the slack wire which sometimes occurs between the check pawl A-336 and the cutter blade part No. A-304 from creeping forward and protruding from the cutter tube part No. A-316. If this should happen, the cutter blade (on the upstroke) bends the end of the wire and forms a large burr which will stick in the anvil part No. A-305, and cause the wire to buckle, or cause a defective stitch. This complete wire check assembly part No. AA-1111 should work properly if no parts are missing. (See figure 5.)

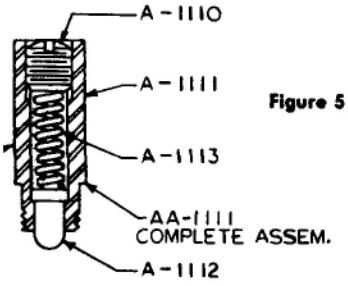

Figure 5

(O) VEE BELT — The vee belt A-913 transmits the power from the motor pulley to the main drive wheel part No. A-370-B. An improperly adjusted belt will wear out rapidly. If the belt is too loose, the machine runs slower than normal; if the belt is too tight, it will cause excessive wear on the main drive wheel and on the drive shaft.

A properly adjusted belt fits snugly on the main pulley and the motor pulley of the machine. These two parts should be centered so that the belt runs in a straight line.

Since the vee belt contains rubber, make certain that is is kept free of oil, which will cause the belt to rot and slip.

(P) BRAKE BRACKET — Part No. A-420-D. The brake bracket exerts a constant pressure on the clutch part No. A-851 so that the machine always stops in a neutral position. If the brake is too loose, the machine will repeat and continue to stitch even after pressure is released from the foot pedal. If the brake is too tight, it will often slow down the machine by creating a drag on the motor. This causes the motor to heat up. Excessive brake tension occasionally will cause a clicking noise in the clutch.

(Q) FORMER ROLLER PART NO. A-310-The former roller part No. A-310 is mounted on the rear of the former housing part A-315 by means of the roller stud A-311. It rides in the track of the former cam part No. A-346 and is the means by which the former and driver assembly AA-315 is raised and lowered for each stroke. Excessive compression of the work material or jamming of the machine will cause the roller to flatten, as in figure 6. Lack of oil will cause this part to bind on the stud and not rotate properly. More often, the lack of oil will cause the roller to wear on the stud, creating a loose fit. See Fig. 6 Detail A Roller and Detail B Stud.

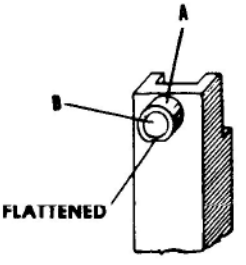

Figure 6

As a result of this wear, the former and driver assembly rides too low. In addition, the cutter blade will not clear the exit of the cutter tube when the formers are at the highest point of their stroke. This causes the wire to buckle between the feed wheels and the feed tube. To check the former roller, remove the former and driver assembly. If the roller is worn, it must be replaced by driving the stud part No. A-311 out. The new stud and roller should be driven on and the stud peened over and filed flush with the surrounding surface. It is very important that the stud be driven in straight so that the roller will ride flat in the cam.

Oil roller before replacing former and driver unit.

(R) — CLUTCH PLATE PART NO. A-402. The clutch plate part No. A-402 holds the clutch pin part A-400 in a retractive position in the clutch A-851. When the foot pedal is depressed, the clutch plate should lower sufficiently to clear the clutch pin, allowing the pin to spring forward and engage the drive pins on the drive wheel.

The proper setting of the foot pedal permits approximately 1/16" clearance between the clutch plate and the clutch pin when the pedal touches the floor.

If the tip of the clutch plate breaks, the machine will continue to stitch without pressure on the foot pedal. The plate can be replaced by removing the cotter pin which holds it to the trip rod.

(S) MAIN DRIVE WHEEL — PART NO. A-470-B and A-470-F. While the motor is running, the main drive wheel rotates constantly on the drive shaft part No. A-850, drawing No. A-10,026 page 27. When the foot pedal is depressed the clutch pin engages the drive pins and causes the shaft to rotate. If the main drive wheel is not oiled sufficiently, it will wear rapidly. Excessive tension on the vee belt will also cause wear of this part. Occasionally, the main drive wheel will freeze on the shaft and the machine will stitch without pressure on the foot pedal. To free the drive wheel, remove the guard, slip off the vee belt, unscrew the cap screw from the end of the drive shaft and fill the drive wheel oil cup with a light penetrating oil. If the drive wheel cannot be removed from the shaft by hand, place a wooden block near the drive wheel hub part No. A-470-F and pound off with a hammer. After the drive wheel has been removed from the shaft, clean the oil groove, clean the bearing surface of the drive wheel and polish the drive shaft with a light emery cloth, removing all burrs. Oil the bearing surfaces well with SAE 20 oil and reassemble.

Figure 7

TO TEST THE LENGTH OF THE STITCH LEGS: (See Figure 7.)

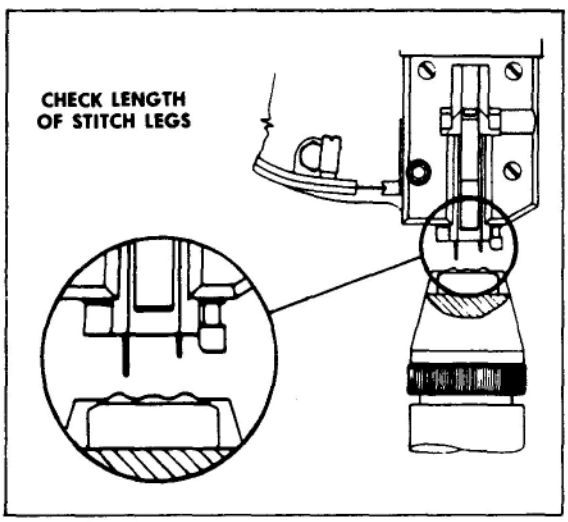

1 - Turn off the motor.
2 - Step on the foot pedal and turn the flywheel slowly until the formers and the driver bar pushes the stitch partially out of the former legs.
3 - Check lower part of the stitch legs to see if they are uneven.
4 - If the leg length is uneven, turn flywheel until formers and driver are at the highest point of their stroke.
5 - Adjust right hand feed wheel part # A-326B for more or less wire to make right hand leg length equal to left hand leg.

TO ADJUST THE FEED WHEELS: (See Page 7 — Drawing No. A-10,028 or Figure 7) If you are unable to get proper leg length, check spacing between the feed wheels.

FEED WHEEL SPACING FOR VARIOUS THICKNESS OF WIRE

Wire Thickness	.017 and .020	.023 and .024	.028
Opening between Feed Wheels	.008	.010	.012

TO CHECK SPACING OF FEED WHEELS:

1 - Remove the wire from the stitcher.
2 - Turn flywheel until high spots of feed wheels face each other.
3 - Check spacing with feeler gauge. Adjust spacing according to the chart.

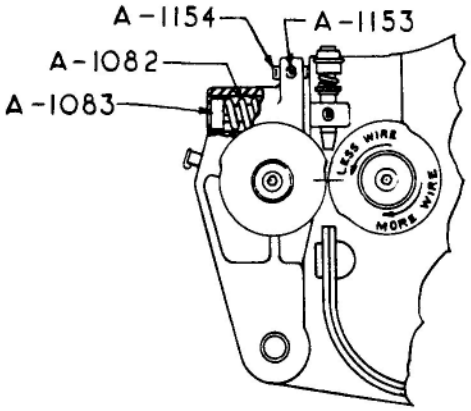

TO ADJUST FEED WHEELS:

1 - Loosen lock screw part No. A-1153.
2 - Turn set screw part No. A-1154 to desired position.
3 - Lock set screw by tightening lock screw part A-1153.
4 - Turn flywheel until former and driver are at the highest point of the stroke. Occasionally a groove is worn in one or both of the feed wheels. This causes the wire to slip and results in uneven leg lengths.

ARCUATE WIRE — MACHINES EQUIPPED FOR ARCUATE WIRE STITCHING

The relationship of the flat on the cam plate (Index A, figure 8) with the flat on the right hand feed wheel (Index B, figure 8), determines the amount of wire which is fed into the machine.

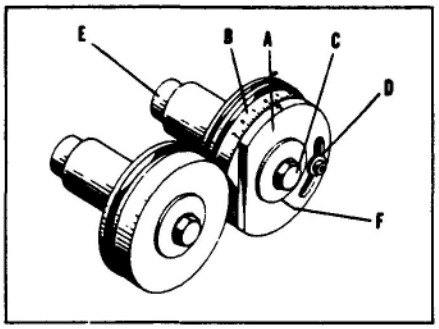

Figure 8

The right hand feed wheel controls the length of the right stitch leg. Move cam plate clockwise to obtain less wire draw — counterclockwise to obtain more wire.

NOTE

The length of the left stitch leg is determined by the thickness of the cutter blade.

TO ADJUST THE CAM PLATE: Turn off the motor and loosen feed wheel screw (Index C, figure 8). Since turning this screw causes the gears to rotate unless held in place, it is necessary to apply clockwise pressure on a screw driver inserted in the driver link. Loosen Allen cap screw (Index D, figure 8) and turn cam as required. The top side of the right hand feed wheel has graduated markings. Move the arrow on the cam plate left one mark to increase the right leg 1/8"; move the arrow right one mark to decrease the right leg 1/8". After making cam plate adjustment, tighten Allen cap screw and feed wheel screw while applying counterclockwise pressure on the screw driver inserted in the driver link. This operation should be repeated until the lengths of stitch legs are equal or there is not more than a 1/64" variation.

Figure 9

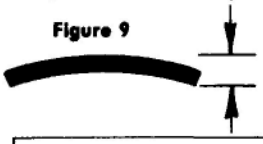

CORRECT AMOUNT OF ARC FOR ARCUATE STITCHING

Unless there is a correct amount of arc in the wire (figure 9) the stitches may not penetrate or clinch properly.

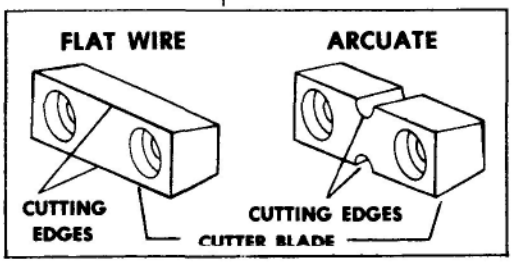

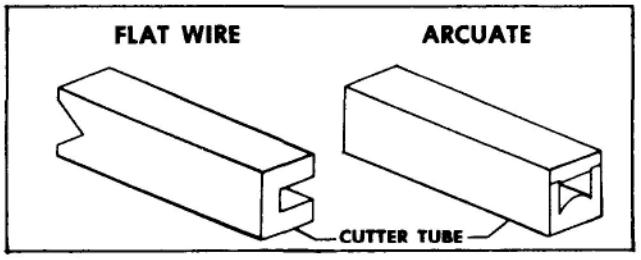

TYPE OF CUTTER TUBES USED FOR FLAT AND ARCUATE WIRE STITCHING